1303 LYNN AVENUE
P.O. BOX 8
ALTOONA, WI 54720-0008

Altoona since 1887

Ph: 715-839-6092
Fax: 715-839-1800
www.ci.altoona.wi.us

DATE: May 2015

TO: Bidders and Contractors for City Street and Utility Projects

Enclosed is the current Standard General Conditions and Specifications for Street and Utility Construction. The information contained in this document will be incorporated by reference into all City of Altoona Invitations for Bid for street and utility projects. Copies are available at a cost of $25.00 each or can be viewed on our website at www.ci.altoona.wi.us.

PLEASE DO NOT DISCARD THIS DOCUMENT AFTER THE BIDDING PROCESS OR AFTER THE CONTRACT IS COMPLETE, AS YOU MAY NEED IT FOR ADDITIONAL PROJECTS.

Please note the following notable revisions. Other changes may be included, but are not listed below. The Contractor is responsible for reviewing the specifications.

1. The Contractor is responsible for all signage and notification related to paving operations.
2. All water main fittings shall be lead-free.
3. Flushing operations for preparing water main for bacteria testing are the responsibility of the Contractor.
4. All valve boxes shall be placed on valve box adapters.

Modifications to this document will be issued in the form of supplements. Supplements will be included in every set of Bid Documents distributed for street and utility projects.

If you have any questions or require additional information, please contact the City Engineer at (715)839-6092.

THIS PAGE INTENTIONALLY LEFT BLANK

CITY OF ALTOONA
WISCONSIN

STANDARD

GENERAL CONDITIONS

AND

SPECIFICATIONS

FOR

STREET AND UTILITY CONSTRUCTION

ISSUED MAY, 2015

THIS PAGE INTENTIONALLY LEFT BLANK

CITY OF ALTOONA

TABLE OF CONTENTS FOR SPECIFICATIONS

DIVISION DESCRIPTION PAGE

0700 - GENERAL CONDITIONS OF THE CONSTRUCTION CONTRACT

0700.1 – DEFINED TERMS

0700.1.1 – General 1
0700.1.2 – Definitions 1
0700.1.3 – Terminology 5
0700.1.4 – Abbreviations 6

0700.2 – PRELIMINARY MATTERS

0700.2.1 – Delivery of Bonds 7
0700.2.2 – Copies of Documents 7
0700.2.3 – Notice to Proceed 7
0700.2.4 – Contractor's Review of Contract Documents 7
0700.2.5 – Coordination and Scheduling 7
0700.2.6 – Control of Work 9
0700.2.7 – Procedures and Notifications 9
0700.2.8 – Notice and Service Thereof 10

0700.3 – CONTRACT DOCUMENTS: INTENT, AMENDING, REUSE

0700.3.1 – Intent 10
0700.3.2 – Reference Standards 11
0700.3.3 – Reporting and Resolving Discrepancies 11
0700.3.4 – Amending and Supplementing Contract Documents 12
0700.3.5 – Reuse of Documents 12

0700.4 – AVAILABILITY OF LANDS; SUBSURFACE AND PHYSICAL CONDITIONS

0700.4.1 – Availability of Lands 12
0700.4.2 – Subsurface and Physical Conditions 13
0700.4.3 – Underground Facilities 14
0700.4.4 - Surveying 15

0700.5 – BONDS AND INSURANCE

0700.5.1 – Performance, Payment, and Other Bonds 16
0700.5.2 – Licensed Sureties and Insurers 17

0700.5.3 – Insurance Requirements 17
0700.5.4 – Deductibles and Self-Insured Retentions.....18
0700.5.5 – Other Insurance Provisions.....18
0700.5.6 – Verification of Coverage.....19
0700.5.7 – Indemnification.....19
0700.5.8 – Employees' Claims.....20

0700.6 – CONTRACTOR'S RESPONSIBLITIES
0700.6.1 – Supervision 20
0700.6.2 – Superintendence.....20
0700.6.3 – Labor.....21
0700.6.4 – Working Hours.....21
0700.6.5 – Services, Materials and Equipment 21
0700.6.6 – Progress Schedule 22
0700.6.7 – Substitutes and "Or-Equals" 22

0700.7 – CONCERNING SUBCONTRACTORS, SUPPLIERS AND OTHERS
0700.7.1 – Acceptable Subcontractors or Suppliers 25
0700.7.2 – City Approval of Subcontractors or Suppliers.....25
0700.7.3 – Contractors Responsibility.....25
0700.7.4 – Scheduling and Coordinating Subcontractors and Suppliers.....25
0700.7.5 – Communicating with Engineer 26
0700.7.6 – Dividing Work 26
0700.7.7 – Agreements with Subcontractor and Supplier 26
0700.7.8 – Patent Fees and Royalties 26
0700.7.9 – Permits 26
0700.7.10 – Laws and Regulations 27
0700.7.11 – Taxes 27
0700.7.12 – Use of Site and Other Areas 27
0700.7.13 – Record Documents.....28
0700.7.14 – Safety and Control Facilities 28
0700.7.15 – Accident Prevention.....29
0700.7.16 – Safety Representative.....29
0700.7.17 – Emergencies.....30
0700.7.18 – Shop Drawing and Samples 30
0700.7.19 – Continuing the Work.....32
0700.7.20 – Contractor's General Warranty and Guarantee 32
0700.7.21 – Indemnification.....33
0700.7.22 – Punch List Items 33

0700.7.23 – Protection of Existing Facilities.....34

0700.8 – OTHER WORK
0700.8.1 – Related Work at Project Site 34
0700.8.2 – Coordination 35

0700.9 – CITY'S RESPONSIBILITIES
0700.9.1 – Communication to Contractor.....35
0700.9.2 – Replacement of Engineer.....35
0700.9.3 – Furnish Data.....35
0700.9.4 – Lands and Easements.....36
0700.9.5 – Limitations on City's Responsibilities 36

0700.10 – ENGINEER'S STATUS DURING CONSTRUCTION
0700.10.1 – City's Representative.....36
0700.10.2 – Visits to Project Site 36
0700.10.3 – Project Representative 37
0700.10.4 – Clarifications and Interpretations.....37
0700.10.5 – Authorized Variations of Work 37
0700.10.6 – Rejecting Defective Work.....37
0700.10.7 – Determination for Unit Price Work 37
0700.10.8 – Decisions on Requirements of Contract Documents
and Acceptability of Work.....37
0700.10.9 – Limitations on Engineer's Authority and Responsibilities 38

0700.11 – CHANGES IN THE WORK
0700.11.1 – Authorized Changes in the Work.....38
0700.11.2 – Execution of Change Orders.....38
0700.11.3 – Estimated Quantities.....38
0700.11.4 – Notification to Surety.....39

0700.12 – LIQUATED DAMAGES
0700.12.1 – General.....39
0700.12.2 – Right to Enforce Damages.....39
0700.12.3 – Non-Waiving of Rights.....39

0700.13 – PARTIAL PAYMENTS; PUNCH LISTS; LIENS
0700.13.1 – Partial Payment Submittal.....39
0700.13.2 – Payment for Delivered Materials.....40
0700.13.3 – Retainage on Partial Payments.....40

0700.13.4 – Final Payment 40
0700.13.5 – Liens.....41

0700.14 – FIELD WORK ORDERS
0700.14.1 – General.....41
0700.14.2 – Time and Material 41

0700.15 – SUSPENSION OF WORK AND TERMINATION
0700.15.1 – City May Suspend Work.....42
0700.15.2 – City May Terminate for Cause 42
0700.15.3 – City May Terminate for Convenience 43

0700.16 – WAGES; REPORTED EARNINGS
0700.16.1 – Wage Rates 44
0700.16.2 – Payroll Records.....44
0700.16.3 – Reported Earnings.....44
0700.16.4 – Non-Discriminatory Clause 45
0700.16.5 – Tax Incremental Finance (TIF) District Requirement 45

0700.17 - DETAILS
Class I Barricades 46
Class II Barricades.....47

2100 - SITE PREPARATION

2100.1 - DESCRIPTION
2100.1.1 – General 1

2100.2 - MATERIALS
2100.2.1 - Remove Items.....1
2100.2.2 - Salvage Items.....1
2100.2.3 - Removal of Traffic Control and Street Signs 1
2100.2.4 - Removal of Mailboxes.....2
2100.2.5 - Removal of Miscellaneous Items 2

2100.3 – METHODS
2100.3.1 - General.....2
2100.3.2 - Clearing and Grubbing 2
2100.3.3 - Disposal of Wood and Debris.....3
2100.3.4 - Tree Protection 3

2100.3.5 - Remove Existing Pavements and Concrete 4
2100.3.6 - Scarify Oil Surface 5
2100.3.7 - Removal of Manhole Castings 5
2100.3.8 - Pulverize Asphalt Surface 6
2100.3.9 – Subcut Road, Place Fabric & Granular Backfill.....7

2100.4 - EROSION CONTROL
2100.4.1 - General.....8
2100.4.2 - Requirements.....8

2100.5 - MEASUREMENT AND PAYMENT
2100.5.1 - Clearing and Grubbing 8
2100.5.2 - Remove Concrete Pavement.....9
2100.5.3 - Remove Curb and Gutter or Curb.....9
2100.5.4 - Remove Concrete Sidewalk.....10
2100.5.5 - Scarify and Preparation of Aggregate Base Course 10
2100.5.6 - Remove Bituminous/Oil Surface.....10
2100.5.7 - Pulverize and Preparation of Base Course 10
2100.5.8 - Pulverize, Transfer, and Preparation of Base Course.....10
2100.5.9 - Sawing 11
2100.5.10 - Tree Protection Fencing.....11
2100.5.11 – Subcut Road, Place Fabric & Granular Backfill.....11

2200 - EXCAVATION AND EMBANKMENT

2200.1 - DESCRIPTION
2200.1.1 – General.....1

2200.2 – MATERIALS
2200.2.1 – General.....1
2200.2.2 – Common Excavation.....1
2200.2.3 – Rock Excavation 2
2200.2.4 – Marsh Excavation 2
2200.2.5 – Unclassified Excavation.....2
2200.2.6 – Granular Backfill 2
2200.2.7 - Borrow Excavation.....3

2200.3 – CONSTRUCTION METHODS
2200.3.1 – General.....3
2200.3.2 – Placing Embankments.....3

2200.3.3 – Compaction 3
2200.3.4 – Moisture Content 4
2200.3.5 – Compaction 4
2200.3.6 – Backfilling of Concrete Work 4
2200.3.7 – Dust Abatement 4
2200.3.8 – Subcut Road, Place Fabric & Granular Backfill 5

2200.4 – MEASUREMENT AND PAYMENT
2200.4.1 – Load Tickets 5
2200.4.2 – Common Excavation 5
2200.4.3 – Rock Excavation 6
2200.4.4 – Marsh Excavation 6
2200.4.5 – Unclassified Excavation 6
2200.4.6 – Borrow Excavation 6
2200.4.7 – Granular Backfill 7
2200.4.8 – Preparation of Subbase 7
2200.4.9 – Water 8
2200.4.10- Subcut Road, Place Fabric & Granular Backfill 8

2230 - AGGREGATE BASE

2230.1 – DESCRIPTION
2230.1.1 – General 1

2230.2 – MATERIALS
2230.2.1 – General 1
2230.2.2 – Crushed Aggregate Base Course 1
2230.2.3 – Recycle Base Course 2

2230.3 – METHODS
2230.3.1 – Aggregate/Recycled Base Course 2
2230.3.2 – Transfer Existing Aggregate Base Course 5

2230.4 – MEASUREMENT AND PAYMENT
2230.4.1 – Aggregate Base Course 5
2230.4.2 – Preparation of Aggregate Base 6
2230.4.3– Transfer Existing Aggregate Base Course 6

2230.5 – DETAILS
Grading Detail 7

Typical Grading Sections....8

2270 - BANK STABILIZATION

2270.1 – DESCRIPTION
2270.1.1 – General....1

2270.2 – MATERIALS
2270.2.1 – Submittals....1
2270.2.3 – Storing and Handling....1
2270.2.4 – Riprap....1
2270.2.5 – Bedding....2

2270.3 – CONSTRUCTION METHODS
2270.3.1 – Excavation and Embankment....3
2270.3.2 – Aggregate Bedding....3
2270.3.3 – Placing Riprap....3

2270.4 – MEASUREMENT AND PAYMENT
2270.4.1 – Bank Stabilization....3

2300 - JACKING AND BORING

2300.1 – DESCRIPTION
2300.1.1 – General....1

2300.2 – MATERIALS
2300.2.1 – General....1
2300.2.2 – Pipe Materials....1
2300.2.3 – Backfill and Cellular Concrete....2

2300.3 – METHODS
2300.3.1 – General....4
2300.3.2 – Cushioning of Barrel and Joints....4
2300.3.3 – Mortaring of Joints....4
2300.3.4 – Grouting of Voids....4
2300.3.5 – Placing Carrier Pipes into Casings....4
2300.3.6 – Boring Water Main Without Casing Pipe....5
2300.3.7 – Encasement of Mains and Bulkheading....5
2300.3.8 – Verification of Line and Grade....5

2300.3.9 – Temporary Concrete Parapets Along Roadway.....5

2300.4 – MEASUREMENT AND PAYMENT
2300.4.1 – Casing Pipe Jacked or Bored 5
2300.4.2 – Casing Pipe Open Cut.....6
2300.4.3 – Sanitary Sewer and Water Main 6

2300.5 – DETAILS
Boring or Jacking with Casing Pipe.....7

2400 - CONCRETE PAVING

2400.1 – DESCRIPTION
2400.1.1 – General.....1
2400.1.2 – Guarantee 1

2400.2 – MATERIALS
2400.2.1 – General.....1
2400.2.2 – Requirements 1
2400.2.3 – Ready-Mix Concrete.....2
2400.2.4 – Cement 3
2400.2.5 – Aggregates 4
2400.2.6 – Water.....5
2400.2.7 – Mortar 5
2400.2.8 – Steel Reinforcement Bars 6
2400.2.9 – Dowel Bars.....7
2400.2.10 – Expansion Joint Materials.....7
2400.2.11 – Impervious Coating.....7
2400.2.12 – Hot-Poured Elastic Sealant 7
2400.2.13 – Cold-Poured Type.....7
2400.2.14 – Preformed Elastomeric Compression Joint Seal.....7
2400.2.15 – Fly Ash.....7
2400.2.16 – Form Coating Oil 8
2400.2.17 – Truncated Dome Detectable Warning Field 8
2400.2.18 – Flexible Joint Sealant.....8

2400.3 – CONSTRUCTION METHODS
2400.3.1 – General.....8
2400.3.2 – Sawing Concrete 8
2400.3.3 – Full Depth Sawing 9

2400.3.4 – Forming 9
2400.3.5 – Foundation/Subgrade Preparation 11
2400.3.6 – Placing of Concrete.....11
2400.3.7 – Finishing of Concrete.....11
2400.3.8 – Concrete Consistency.....12
2400.3.9 – Handicapped Curb Ramps 12
2400.3.10 – Expansion and Contraction Joints.....13
2400.3.11 – Curing of Concrete 15
2400.3.12 – Sealing Joints 17
2400.3.13 – Protection of Concrete 20
2400.3.14 – Cold Weather Pouring.....20
2400.3.15 – Cold Weather Protection/Curing.....20
2400.3.16 – Concrete Testing 20
2400.3.17 – Adjustment of Manhole and Inlet Castings 21
2400.3.18 – Adjust Valve 23
2400.3.20 – Pavement Ties and Dowel Bars 23

2400.4 – MEASUREMENT AND PAYMENT
2400.4.1 – Concrete Pavement 24
2400.4.2 – Concrete Curb and Gutter 25
2400.4.3 – Sidewalk.....25
2400.4.4 – Driveway Approaches/Handicap Curb Ramps 25
2400.4.5 – Sawing.....25
2400.4.6 – Sawing Pavement, Full Depth.....25
2400.4.7 – Adjust Manhole Casting in Concrete Pavement 26
2400.4.8 – Adjust Inlet Casting 26
2400.4.9 – Major Adjustment (Manhole) 26
2400.4.10 – Adjust Valve in Concrete Pavement 26
2400.4.11 – Pavement Ties and Dowel Bars 27
2400.4.12 – Concrete Steps 27
2400.4.13 – Integral/Knee Wall or Step Side Wall 27
2400.4.14 – Truncated Dome Detectable Warning Field 29

2400.5 – DETAILS
Curb and Gutter Detail.....29
Sidewalk Detail.....29
Driveway Detail.....30
Handicap Ped. Ramps 31
Concrete Pavement Joints.....32

Deformed Steel Tie Bar Detail 33
Concrete Pavement Boxout.....33
Depressed Median Nose without Curb and Gutter 34
Depressed Median Nose with Curb and Gutter 35
Concrete Steps 36

2500 - ASPHALTIC PAVING

2500.1 – DESCRIPTION
2500.1.1 – General.....1

2500.2 – MATERIALS
2500.2.1 – General.....1
2500.2.2 – Asphaltic Pavement 1
2500.2.3 – Tack Coat.....1
2500.2.4 – Mortar 2
2500.2.5 – Flexible Joint Sealant.....2

2500.3 – METHODS
2500.3.1 – Saw Cut Pavement.....2
2500.3.2 – Tack Coat.....2
2500.3.3 – Paving and Surfacing 2
2500.3.4 – Compaction 4
2500.3.5 – Asphaltic Driveway Restoration.....5
2500.3.6 – Adjustment of Manholes 6
2500.3.7 – Adjust Valve 8
2500.3.8 – Equipment 9
2500.3.9 – Traffic 10
2500.3.10 – Site Clean-Up.....10
2500.3.11 – Paving Width 10
2500.3.12 – Notice of Paving 10

2500.4 – MEASUREMENT AND PAYMENT
2500.4.1 – Tack Coat.....10
2500.4.2 – Asphaltic Concrete Pavement.....10
2500.4.3 – Adjust Manhole Casting in Asphaltic Pavement 11
2500.4.4 – Major Adjustment (Manhole) 11
2500.4.5 – Adjust Valve 11

2600 - WATER MAIN

2600.1 – DESCRIPTION
2600.1.1 – General 1

2600.2 – MATERIALS
2600.2.1 – General 1
2600.2.2 – Bedding 2
2600.2.3 – Backfill Material 3
2600.2.4 – Water Main 4
2600.2.5 – Fittings 5
2600.2.6 – Valve Boxes 5
2600.2.7 – Fire Hydrants 6
2600.2.8 – Valves 6
2600.2.9 – Corporation Stops 8
2600.2.10 – Curb Stops and Boxes 8
2600.2.11 – Water Services 9
2600.2.12 – Polystyrene Insulation 9

2600.3 – METHODS
2600.3.1 – General 9
2600.3.2 – Operation of Water System 10
2600.3.3 – Abandonment and Salvage 10
2600.3.4 – Line and Grade 10
2600.3.5 – Excavation and Backfill 11
2600.3.6 – Pipe Laying 13
2600.3.7 – Water Main in Casing Pipe 14
2600.3.8 – Restraining Water Main 15
2600.3.9 – Fire Hydrants 16
2600.3.10 – Valves 17
2600.3.11 – Tapping of Water Main 17
2600.3.12 – Fittings 17
2600.3.13 – Vaults 17
2600.3.14 – Polystyrene Insulation 17

2600.4 – WATER SERVICES
2600.4.1 – General 18
2600.4.2 – Service Separation 18

2600.4.3 – Trench Backfill 18
2600.4.4 – Laying Services 18

2600.5 – TESTING
2600.5.1 – General 20
2600.5.2 – Flushing 20
2600.5.3 – Pressure/Leak Test 20
2600.5.4 – Electrical Conductivity Test 22
2600.5.5 – Bacteriological Safe Test 23
2600.5.6 – Tracer Wire Testing 25

2600.6 – MEASUREMENT AND PAYMENT
2600.6.1 – Water Main 25
2600.6.2 – Restrained Joint Water Main 25
2600.6.3 – Hydrant Lead 25
2600.6.4 – Fire Hydrants 26
2600.6.5 – Remove and Relocate Hydrant 26
2600.6.6 – Remove and Salvage Hydrant 26
2600.6.7 – Install Fire Hydrant from Salvage 26
2600.6.8 – Valve and Box 26
2600.6.9 – Tap and Corporation 26
2600.6.10 – Water Service 26
2600.6.11 – Adjust Curb Box 27
2600.6.12 – Discontinue Existing Service 27
2600.6.13 – Exploratory Excavation 27
2600.6.14 – Fittings 27
2600.6.15 – Polystyrene Insulation Board 27
2600.6.16 – Rock Excavation 28
2600.6.17 – Crushed Stone Bedding Material 28

2600.7 – DETAILS
Standard Hydrant Installation 29
Proposed Service Installation 30
Existing Service Installation 31
Water Main Joint Detail 32

2700 - SANITARY AND STORM SEWER

2700.1 – DESCRIPTION
2700.1.1 – General 1

2700.2 – MATERIALS

2700.2.1 – General 1
2700.2.2 – Bedding 2
2700.2.3 – Backfill Material 3
2700.2.4 – Backfill Concrete 4
2700.2.5 – Cellular Concrete 4
2700.2.6 – General Pipe Requirement 5
2700.2.7 – Polyvinyl Chloride (PVC) Pipe 7
2700.2.8 – Reinforced Concrete Pipe 8
2700.2.9 – Ductile Iron Sewer Pipe 9
2700.2.10 – Corrugated Metal Pipe 10
2700.2.11 – Corrugated Aluminum Pipe 13
2700.2.12 – High Density Polyethylene (HDPE) Pipe 15
2700.2.13 – Manholes 16
2700.2.14 – Inlets 17
2700.2.15 – Concrete Brick and Block 18
2700.2.16 – Mortar 18
2700.2.17 – Polystyrene Insulation 18
2700.2.18 – Manhole/Inlet Castings 18
2700.2.19 – Manhole Chimney Seals 19
2700.2.20 – Storm Inlet Chimney Seals 19
2700.2.21 – Existing Casting Removed 20
2700.2.22 – Reinforced Concrete Pipe Adapters 20
2700.2.23 – Coal-Tar Epoxy Inner Surface Coating 20
2700.2.24 – Tracer Wire 20

2700.3 – METHODS

2700.3.1 – General 21
2700.3.2 – Line and Grade 21
2700.3.3 – Abandonment and Salvage 21
2700.3.4 – Excavation and Backfill 21
2700.3.5 – Pipe Laying 24
2700.3.6 – Manholes 24
2700.3.7 – Existing Sanitary Manhole Connection 25
2700.3.8 – Inlets 26

2700.4 – SERVICES

2700.4.1 – General 27

2700.4.2 – Service Separation 27
2700.4.3 – Trench Backfill 28
2700.4.4 – Fittings 28
2700.4.5 – Service Construction 28

2700.5 – TESTING
2700.5.1 – General 31
2700.5.2 – Deflection Test 31
2700.5.3 – Water Infiltration Test 32
2700.5.4 – Low Pressure Test 32
2700.5.5 – Force Main Test 33
2700.5.6 – Sanitary Sewer Televising 34

2700.6 – MEASUREMENT AND PAYMENT
2700.6.1 – Sanitary and Storm Sewer 35
2700.6.2 – Manhole Masonry 35
2700.6.3 – Inlet Masonry 35
2700.6.4 – Inlet Lead 35
2700.6.5 – Remove and Reset Inlet 35
2700.6.6 – Remove Existing Inlet Lead 35
2700.6.7 – Sanitary Sewer Service 36
2700.6.8 – Remove and Replace Sanitary Service 36
2700.6.9 – Manhole/Inlet Castings 36
2700.6.10 – Exploratory Excavation 36
2700.6.11 – Polystyrene Insulation Board 36
2700.6.12 – Drop Pipe 36
2700.6.13 – Rock Excavation 37
2700.6.14 – Reinforced Concrete Pipe Adapter 37
2700.6.15 – Crushed Stone Bedding Material 37
2700.6.16 – Remove Manhole Masonry 37
2700.6.17 – Remove Inlet Masonry 37
2700.6.18 – Tunnel Sanitary Sewer Service 37
2700.6.19 – Relocate Sanitary Sewer Service 38
2700.6.20 – Core Drilling of Existing Manholes 38
2700.6.21 – Flexible Pipe-to-Manhole Boots 38
2700.6.22 – Manhole Chimney Seals/Storm Inlet Chimney Seals 38

2700.7 – DETAILS
Standard Manhole 39

Saddle Manhole 40
Drop Manhole 41
Precast Manhole Tee 42
Force Main Cleanout Manhole 43
Sanitary Service and Riser Detail 44
Precast Reinforced Concrete Inlet 45
Precast Adjustment Rings 46
Inlet Castings 47
Manhole Castings and Rings 48
Catch Basin Manhole Installation Procedures 49

2710 – LOW PRESSURE SANITARY SEWER

2710.1 – DESCRIPTION
2710.1.1 – General 1

2710.2 – MATERIALS
2710.2.1 – General Requirements 1
2710.2.2 – HDPE Pipe and Fittings 2
2710.2.3 – HDPE Transition Couplings and Adapters 2
2710.2.4 – Ball Valves 2
2710.2.5 – Pressure Sewer Services and Fittings 3
2710.2.6 – Bedding and Backfill 3

2710.3 – METHODS
2710.3.1 – General Provisions 3
2710.3.2 – Blocking of HDPE Pipe 3
2710.3.3 – Locating Wire 3
2710.3.4 – Connection and Assembly of Joints 3
2710.3.5 – Pressure Sewer Service Installation 4

2710.4 – TESTING
2710.4.1 – General 5
2710.4.2 – Testing Tracer Wire Continuity 6

2710.5 – MEASUREMENT AND PAYMENT
2710.5.1 – General 6
2710.5.2 – Pressure Sewer, Pressure Sewer Service or Forcemain 6
2710.5.3 – Valves 7
2710.5.4 – HDPE Tapping Tee with Electrofusion Saddle 7

2710.5.5 – HDPE Service Tees.....7
2710.6.1 – Tracer Boxes.....7
2710.6.2 – Access Structures.....7
2710.6.3 – Cleanout Manhole Components.....7
2710.6.4 – Pressure Sewer and Forcemain Fittings.....8

2710.6 – DETAILS
HDPE Pressure Lateral.....9
HDPE Forcemain to Manhole Connection.....10
Cleanout Manhole.....11

2800 – LOCATING WIRE FOR WATER AND SANITARY SEWER

2800.1 – DESCRIPTION
2800.1.1 – General.....1
2800.1.2 – Sanitary Sewer.....1

2800.2 – MATERIALS
2800.2.1 – Locating (Tracer) Boxes.....1
2800.2.2 – Locating Wire for Open Cut Applications.....2
2800.2.3 – Locating Wire for Directional Drilled Installations.....2

2800.3 – METHODS
2800.3.1 – General.....3
2800.3.2 – Locating Wire Splices.....3
2800.3.3 – Locating Wire Connections.....3

2800.4 – TESTING
2710.4.1 – General.....5

2800.5 – MEASUREMENT AND PAYMENT
2800.5.1 – General.....6

2900 - RESTORATION

2900.1 – DESCRIPTION
2900.1.1 – General.....1

2900.2 - MATERIALS
2900.2.1 – General.....1

2900.2.2 – Topsoil 1
2900.2.3 – Humus 2
2900.2.4 – Fertilizer 2
2900.2.5 – Mulch 2
2900.2.6 – Fiber Blanket 2
2900.2.7 – Sod 3
2900.2.8 – Seed 3
2900.2.9 – Trees and Shrubs 3
2900.2.10 – Stakes 4
2900.2.11 – Water 4
2900.2.12 – Concrete Paving Stone 4
2900.2.13 – Concrete Split-Block Retaining Wall 6
2900.2.14 – Solid Core Interlocking Block Retaining Wall 7
2900.2.15 – Rip Rap 7
2900.2.16 – Mailboxes 7

2900.3 – METHODS
2900.3.1 – General 7
2900.3.2 – Subgrade Preparation 7
2900.3.3 – Topsoil 8
2900.3.4 – Fertilizer 8
2900.3.5 – Sod 8
2900.3.6 – Staking 9
2900.3.7 – Seed 9
2900.3.8 – Fiber Blanket and Mulch 9
2900.3.9 – Lawn Restoration 9
2900.3.10 – Trees and Shrubs 10
2900.3.11 – Rip Rap 12
2900.3.12 – Concrete Split-Block Retaining Wall 13
2900.3.13 – Solid Core Interlocking Block Retaining Wall 13
2900.3.14 – Concrete Paving Stone (Unpaved) 13
2900.3.15 – Concrete Paving Stone (Paved Areas) 16
2900.3.16 – Site Clean-Up 20

2900.4 – MEASUREMENT AND PAYMENT
2900.4.1 – Lawn Replacement 20
2900.4.2 – Trees and Shrubs 20
2900.4.3 – Concrete Paving Stone (Non-paved Area) 21
2900.4.4 – Concrete Paving Stone (Paved Area) 21

2900.4.5 – Concrete Split-Block Retaining Wall 21
2900.4.6 – Solid Core Interlocking Block Retaining Wall.....21
2900.4.7 – Rip Rap 22

2900.5 – DETAILS
Planter Detail 23
Split Block Retaining Wall.....24

9900 - PAINTING STEEL STRUCTURES

9900.1 - DESCRIPTION
9900.1 Description.....1

9900.2 – MATERIALS
9900.2.1 – General.....1
9900.2.2 – Enamel System.....1
9900.2.3 – Epoxy System 2
9900.2.4 – Coating Systems (Elevated Water Tank) 2
9900.2.5 – Submittals 3

9900.3 – CONSTRUCTION REQUIREMENTS
9900.3.1 – General.....4
9900.3.2 – Protection of Finished Work and Equipment.....4
9900.3.3 – Storage of Materials.....4
9900.3.4 – Surface Preparation.....4
9900.3.5 – Application.....5
9900.3.6 – Ventilation.....5

9900.4 – STERILIZATION
9900.4.1 – General.....5
9900.4.2 – Testing and Chlorination.....5

9900.5 – METHOD OF MEASUREMENT AND PAYMENT
9900.5.1 – Painting 6

16500 - STREET LIGHTING

16500.1 – DESCRIPTION
16500.1 – Description.....1

16500.2 – CODES AND STANDARDS
16500.2 – Codes and Standards 1

16500.3 – DRAWINGS AND CORRELATION OF WORK
16500.3 – Drawings and Correlation of Work 1

16500.4 – LIGHTING UNIT
16500.4.1 – General 1
16500.4.2 – Luminaires 2
16500.4.3 – Poles 2
16500.4.4 – Pole and Bracket Lighting Cable 3
16500.4.5 – Concrete Lighting Bases 3

16500.5 – LIGHTING CONTROL CABINET
16500.5.1 – General 3
16500.5.2 – Requirements 4
16500.5.3 – Disconnect Switches 4
16500.5.4 – Controls 4
16500.5.5 – Grounding 5
16500.5.6 – Service Supply 5

16500.6 – UNDERGROUND CABLE & GROUNDING
16500.6.1 – Underground Cable 5
16500.6.2 – Grounding 5
16500.6.3 – Conduit 5
16500.6.4 – Cable-in-Duct 5

16500.7 – REMOVE TRAFFIC / LIGHTING UNIT
16500.7.1 – General 6
16500.7.2 – Preconstruction Activities and Inspection 6
16500.7.3 – Pole Ownership 6
16500.7.4 – Storage Location 6

16500.8 – INSTALL STREET LIGHT FROM SALVAGE
16500.8.1 – General 6

16500.9 – BASIS OF PAYMENT
16500.9.1 – Lighting Unit (Installed) 7
16500.9.2 – Lighting Unit (Spare) 7

16500.9.3 – Street Lighting System.....7
16500.9.4 – Remove Traffic / Lighting Unit.....7
16500.9.5 – Install Street Light from Salvage.....7

16570 - TRAFFIC SIGNALS

16570.1 – DESCRIPTION
16570.1 – Description.....1

16570.2 – CODES AND STANDARDS
16570.2 – Codes and Standards.....1

16570.3 – DRAWINGS AND CORRELATION OF WORK
16570.3 – Drawings and Correlation of Work.....1

16570.4 – TRAFFIC SIGNAL SYSTEM
16570.4.1 – General.....2
16570.4.2 – As-built Diagrams.....2
16570.4.3 – Shop Drawings.....2
16570.4.4 – Standard Traffic Components.....2
16570.4.5 – Traffic Controller with Cabinet as Specified.....2
16570.4.6 – Method of Measurement.....19
16570.4.7 – Basis of Payment.....19

16570.5 – OPTICOM PRE-EMPT SYSTEM
16570.5.1 – Description.....19
16570.5.2 – Codes and Standards.....19
16570.5.3 – Priority Control System.....19
16570.5.4 – Basis of Payment.....20

16570.6 – REMOTE COMMUNICATION SYSTEM
16570.6.1 – Description.....20
16570.6.2 – Materials.....20
16570.6.3 – Basis of Payment.....21

16570.7 –LED TRAFFIC SIGNAL FACES
16570.7.1 – Description.....21
16570.7.2 – Materials.....21
16570.7.3 – Basis of Payment.....22

CITY OF ALTOONA

S P E C I F I C A T I O N S

DIVISION 0700 - GENERAL CONDITIONS OF THE CONSTRUCTION CONTRACT

0700.1 – DEFINED TERMS

0700.1.1 - General

Wherever used in the Contract Documents and printed with initial capital letter, the terms listed below will have the meaning indicated which are applicable to both the singular and plural thereof.

0700.1.2 – Definitions

1. *Addenda:* Written or graphic instruments issued prior to the opening of Bids which clarify, correct, or change the Bidding Requirements or the Contract Documents.

2. *Agreement:* The written instrument, which is evidence of the agreement between City and Contractor, covering the Work.

3. *Application for Payment:* The form acceptable to the Engineer which is to be used by the Contractor during the course of Work in requesting progress or final payments and which is to be accompanied by such supporting documentation as is required by the Contract Documents.

4. *Bid:* The offer or proposal of a bidder submitted on the prescribed form setting forth the prices for the Work to be performed.

5. *Bidding Documents:* The Bidding Requirements and the proposed Contract Documents (including all Addenda issued prior to receipt of Bids).

6. *Bidding Requirements:* The Advertisement or Invitation to Bid, including Instructions to Bidders, Bid security form, if any, the Bid form with any supplements and all addenda issued.

7. *Bonds:* Performance and payment bonds and other instruments of security.

8. *Change Order:* A document recommended by the Engineer which is signed by the Contractor and City and authorizes an addition, deletion, or revision in the Work or an adjustment in the Contract Price or the Contract Times, issued on or after the Effective Date of Agreement.

9. *City:* City of Altoona, Wisconsin

10. *Claim:* A demand or assertion by the Contractor seeking an adjustment of the Contract Price or Contract Times, or both, or other relief with respect to the terms of the Contract. A demand for money or services by a third party is not a Claim.

11. *Contract:* The entire, integrated written agreement between the City and the Contractor concerning the Work. The Contract supercedes prior negotiations, representations, or agreements, whether written or oral. The Contract Documents establish the rights and obligations of the parties and include the Agreement, Addenda (which pertain to the Contract Documents), Contractor's Bid (including documentation accompanying the Bid and any post bid documentation submitted prior to the Notice of Award) when attached as an exhibit to the Agreement, the Notice to Proceed, the Bonds, these General Conditions, the Supplementary Conditions, the Specifications and the Drawings as the same are more specifically identified in the Agreement, together with all Written Amendments, Change Orders, Field Work Orders, and the Engineer's written interpretations and clarifications issued on or after the Effective Date of Agreement. Approved Shop Drawings and drawing of subsurface and physical conditions are not Contract Documents. Only printed or hard copies of the items listed in this paragraph are Contract Documents. Files in electronic media format or text, data, graphics, and the like that may be furnished by the City to the Contractor are not Contract Documents.

12. *Contract Price:* The moneys payable by the City to the Contractor for completion of the Work in accordance with the Contract Documents as stated in the Agreement.

13. *Contract Times:* The number of days or the dates stated in the Special Provisions to achieve Substantial Completion and/or to complete the Work so that it is ready for final payment.

14. *Contractor:* The individual or entity with whom the City has entered into the Agreement with.

15. *Drawings:* The part of the Contract Documents prepared or approved by the Engineer which graphically shows the scope, extent, and character of the Work to be performed by the Contractor. Shop Drawings and other Contractor submittals are not considered Drawings.

16. *Date of Agreement:* The date indicated in the Agreement on which it becomes effective, but if no such date is indicated, it shall mean the date on which the Agreement is signed and delivered by the last of the two parties.

17. *Engineer:* The City Engineer for the City of Altoona or his authorized representative.

18. *Engineer's Consultant:* An individual or entity having a contract with the City of Altoona to furnish services as an independent associate or consultant with respect to the Project and who is identified as such in the Special Provisions.

19. *Field Work Order:* A written order issued by the Engineer which requires minor changes in the Work but which does not involve a change in the Contract Price or Contract Times.

20. *Final Acceptance:* Final payment shall constitute final acceptance under the Contract Documents.

21. *Laws and/or Regulations:* Any and all applicable laws, rules, regulations, ordinances, codes, and orders of any and all governmental bodies, agencies, authorities, and courts having jurisdiction.

22. *Liens:* Legal charges, security interests, and encumbrances upon Project funds, real property, or personal property.

23. *Milestone:* A principal event specified in the Contract Documents relating to an intermediate completion date or time prior to Substantial Completion of all the Work.

24. *Notice of Award:* The written notice by the City to the apparent successful bidder stating that upon timely compliance by the apparent successful bidder with the conditions precedent listed therein, City will sign and deliver the Agreement.

25. *Notice to Proceed:* A written notice given by the City to the Contractor fixing the date on which the Contract Times will commence to run and on which the Contractor shall start to perform the Work under the Contract Documents.

26. *Owner:* City of Altoona, Wisconsin

27. *Project:* The total construction of which the Work is to be performed under the Contract Documents and may be the whole, or a part as may be indicated elsewhere in the Contract Documents.

28. *Project Manual:* The documentary information prepared for bidding and constructing the Work. A listing of the contents of the Project Manual is contained in the table of contents.

29. *Project Representative:* The Engineer or authorized designee of the Engineer who may be assigned to the Project Site or any part thereof.

30. *Project Site:* Lands or areas indicated in the Contract Documents upon which the Work is to be performed, including right-of-ways and easements for access and such other lands furnished by City which are designated for the use of the Contractor.

31. *Samples:* Physical examples of materials, equipment, or workmanship that are representative of some portion of the Work and which establish the standards by which the Work will be judged.

32. *Shop Drawings:* All drawings, diagrams, illustrations, schedules, and other data or information which are specifically prepared or assembled by or for the Contractor and submitted by the Contractor to the Engineer to illustrate some portion of the Work.

33. *Specifications:* That part of the Contract Documents consisting of written technical descriptions of materials, equipment, systems, standards, and workmanship as applied to the Work and certain administrative details.

34. *Subcontractor:* An individual or entity having a direct contract with the Contractor or with any other Subcontractor for the performance of a part of the Work on the Project Site.

35. *Substantial Completion:* The time at which the Work has progressed to the point where, in the opinion of the Engineer, the Work is sufficiently complete, in accordance with the Contract Documents, so that the Work can be utilized for the purposes for which it is intended. The terms “substantially complete” and “substantially completed” as applied to all or part of the work shall refer to Substantial Completion.

36. *Supplementary Conditions:* That part of the Contract Documents which amends or supplements these General Conditions.

37. *Supplier:* A manufacturer, fabricator, supplier, distributor, materialman or vendor having a direct contract with the Contractor or with any Subcontractor to furnish materials or equipment to be incorporated in the Work by the Contractor or any Subcontractor.

38. *Surety:* Any person, firm or corporation that has executed, as surety, the Contractor’s performance and payment Bond securing performance and payment of the Contract.

39. *Underground Facilities:* All underground pipelines, conduits, ducts, cables, wires, manholes, vaults, tanks, tunnels, or other facilities or attachments, and any encasements containing such facilities, including those that convey electricity, gases, steam, telephone or other communications, fiber optic cable, cable television, water, wastewater, storm water, other liquids or chemicals, or traffic, lighting, and other control systems.

40. *Unit Price Work:* Work to be paid for on the basis of unit prices.

41. *Work:* The entire completed construction or the various separately identifiable parts thereof required to be provided under the Contract Documents. Work includes and is the result of performing or providing all labor, services, and documentation necessary to produce such construction, and furnishing, installing, and incorporating all materials and equipment into such construction, all as required by the Contract Documents.

0700.1.3 – Terminology

0700.1.3.1 – Intent of Certain Terms or Adjectives

Whenever in the Contract Documents the terms "as allowed," "as approved," or terms of like effect or import are used, or the adjectives "reasonable," "suitable," "acceptable," "proper," "satisfactory," or adjectives of like effect or import are used to describe an action or determination of Engineer as to the Work, it is intended that such action or determination will be solely to evaluate, in general, the completed Work for compliance with the requirements of and information in the Contract Documents and conformance with the design concept of the completed Project as a functioning whole as shown or indicated in the Contract Documents. The use of any such term or adjective shall not be effective to assign to the Engineer any duty or authority to supervise or direct the performance of the Work or any other provision of the Contract Documents.

0700.1.3.2 – Day

The word "day" shall constitute a calendar day of twenty-four (24) hours measured from midnight to the next midnight.

0700.1.3.3 – Defective

The word "defective" refers to Work that is unsatisfactory, faulty, or deficient in that it does not conform to the Contract Documents or does not meet the requirements of any inspection, reference standard, test, or approval referred to in the Contract Documents, or has been damaged prior to the Engineer's recommendation of final payment.

0700.1.3.4 – Furnish, Install, Perform, Provide

0700.1.3.4.1 – Furnish

The word "furnish" when used in connection with services, materials, or equipment, shall mean to supply and deliver-said services, materials, or equipment to the Project Site ready for use or installation and in usable or operable condition.

0700.1.3.4.2 – Install

The word "install" when used in connection with services, materials, or equipment, shall mean to put into use or place in final position said services, materials, or equipment complete and ready for intended use.

0700.1.3.4.3 – Perform or Provide

The words "perform," or "provide," when used in connection with services, materials, or equipment, shall mean to furnish and install-said services, materials, or equipment complete for the intended use.

When "furnish," "install," "perform," or "provide is not used in connection with services, materials, or equipment in a context clearly requiring an obligation of the Contractor, "provide" is implied.

0700.1.3.5 – Implied Terminology

Unless stated otherwise in the Contract Documents, words or phrases used in the Contract Documents, which have a well-known technical or construction industry or trade meaning these words or phrases shall be in accordance with the recognized meaning.

0700.1.4 – Abbreviations

WSSHSC:	State of Wisconsin, Department of Transportation, Standard Specifications for Highway and Structure Construction; Current Edition
A.S.T.M.:	American Society for Testing and Materials
A.N.S.I.:	American National Standards Institute
A.A.S.H.T.O.:	American Association of State Highway and Transportation Officials
A.W.W.A.:	American Water Works Association
M.U.T.C.D.:	Manual on Uniform Traffic Control Devices
N.E.M.A.:	National Electrical Manufacturers Association
N.E.C.:	National Electrical Code
S.S.P.C.:	Steel Structures Painting Council

The use of an A.S.T.M., A.N.S.I., A.A.S.H.T.O., A.W.W.A., N.E.M.A, N.E.C., or M.U.T.C.D. designation in these specifications refers to the latest revision of that particular standard or tentative standard of that organization.

All materials, methods, equipment, etc., which are components of this, contract shall conform to the Current Edition of "Standard Specifications for Road and Bridge Construction: as published by the State of Wisconsin, except as modified within this specification.

0700.2 – PRELIMINARY MATTERS

0700.2.1 – Delivery of Bonds

When the Contractor delivers the executed agreements to the City, the Contractor shall also deliver to the City such Bonds that are required in the Contract Documents.

0700.2.2 – Copies of Documents

The City shall furnish to the Contractor up to ten (10) copies of the Bidding Documents and Drawings. Additional copies will be furnished upon request at the cost of reproduction. The City will also provide one (1) copy of the Standard General Conditions and Specifications for Street and Utility Construction at the beginning of each construction season.

0700.2.3 – Notice to Proceed

The Contract Times will commence to run on the day indicated on the Notice to Proceed.

0700.2.4 – Contractor's Review of Contract Documents

Before undertaking each part of the Work, the Contractor shall carefully study and compare the Contract Documents and check and verify pertinent figures therein and all applicable field measurements. The Contractor shall promptly report in writing to the Engineer any conflict, error, ambiguity, or discrepancy, which the Contractor may discover. The Contractor shall obtain a written interpretation or clarification from the Engineer before proceeding with any affected Work.

0700.2.5 - Coordination and Scheduling

0700.2.5.1 - Project Schedule

Prior to the start of the project, the Contractor shall submit for approval by the City, a complete construction schedule for the project. The schedule shall contain beginning and completion dates of the proposed construction for all Contractors and Subcontractors for all phases of the project.

0700.2.5.2 - Preconstruction Meeting

A preconstruction meeting will be arranged by the City to discuss the construction schedule. One representative of each the Contractor and Subcontractor involved in this contract will be required to attend the preconstruction conference. The City will send notices to the Contractor, the utility companies, and any other interested parties. The Contractor shall be responsible for notifying all Subcontractors of the meeting.

0700.2.5.3 - Weekly Construction Meeting

A weekly construction meeting shall be conducted at a mutually agreed upon location for the purpose of updating schedules and coordinating construction activities between all involved parties. This meeting is necessary to maintain cooperation and coordination for the timely completion of the project, and attendance by all Contractors and Subcontractors is mandatory.

0700.2.5.4 - Coordination of Work

0700.2.5.4.1 - Water Utility Coordination

All required water main shutoffs shall be scheduled with the City Water Utility. No additional compensation shall be made for water main shutoffs scheduled outside of the Contractor's normal workday hours.

0700.2.5.4.2 - Private Utility Coordination

The Contractor shall coordinate all construction activity with Xcel Gas, Xcel Electric, Charter Communications, AT&T, and any other public or private utility company that has utilities within the project area. Where directed by the Engineer, time shall be allowed after surface removal for the underground utility contractors to complete their work before placing base course and surfacing.

0700.2.5.4.3 - Scheduling of Work

The Contractor shall coordinate his work with other street and utility contractors. When a street is turned over to the Contractor and work has begun on the street, the Contractor shall schedule his crews, his Subcontractors, and his materials such that work is completed in accordance with the work schedule approved by the City. The City and the Contractor shall

mutually agree upon any deviations of this schedule. There shall be no avoidable delays until the construction is complete.

0700.2.6 - Control of Work

0700.2.6.1 - Engineer

The Engineer will decide all questions which arise as to the quality and acceptability of materials furnished, work performed, rate of progress of the Work, interpretation of the plans and specifications, acceptable fulfillment of the Contract, compensation, and disputes and mutual rights between Contractors under the Specifications.

The Engineer shall in no case act as the foreman or perform other duties for the contractor, such as transferring grades from construction stakes.

The Engineer may suspend the Work, wholly or in part, for the Contractor's failure to correct conditions unsafe for the project personnel or general public, for the Contractor's failure to carry out the provisions of the Contract, and for the Contractor's failure to carry out the orders of the Engineer. If the Contractor fails to suspend operations when so directed in writing, the work done after such direction may be rejected without payment thereof.

Absence of action by the Engineer to suspend work following any of these failures by the Contractor shall not relieve the Contractor form the Contractor's duties and obligations under the Contract.

0700.2.7 - Procedures and Notifications

0700.2.7.1 - General

The Contractor will be required to follow all procedures and notifications as stated in the contract to insure the timely and coordinated completion of the contract.

0700.2.7.2 - Notification of Commencement of Work

Prior to beginning any Work under this contract, the Contractor shall request approval to begin construction from the Engineer a minimum of two (2) days in advance. The requests shall be submitted by all Contractors and Subcontractors involved with any part of the Project. A new request shall be made for all areas (streets) of the contract, and again during unforeseen delays or schedule changes.

0700.2.7.3 - Utility Notification

The City of Altoona, and all public utilities within the City, are members of Diggers Hotline, Inc. The Contractor shall be responsible to notify Diggers Hotline, Inc. before beginning any excavation. In locations where the adjoining property is currently being developed, the Contractor shall also contact the adjoining property owner and its engineer for any utility locates.

The Contractor shall comply with all the requirements of Wisconsin Statutes s.182.0175 with regard to excavation. Failure to comply with these requirements will be considered grounds for suspension of work and disqualify the Contractor as a bidder on other City projects.

0700.2.8 – Notice and Service Thereof

Written notice shall be deemed to have been duly serviced if delivered in person to the individual or to a member of the firm or to an officer of the corporation for whom it is intended, or if delivered at or sent by certified mail to the last business address known to him who gives the notice.

0700.3 – CONTRACT DOCUMENTS: INTENT, AMENDING, REUSE

0700.3.1 – Intent

0700.3.1.1 – General

The Contract Documents are complementary and what is called for by one is as binding as if called for by all.

0700.3.1.2 – Intent of Contract Documents

It is the intent of the Contract Documents to describe a functionally complete Project to be constructed in accordance with the Contract Documents. Any labor, documentation, services, materials, or equipment that may reasonably be inferred from the Contract Documents or from prevailing custom or trade usage as being required to produce the intended result will be provided by the Contractor whether or not specifically called for and at no additional cost to the City.

0700.3.1.3 – Clarifications and Interpretations

The Engineer shall issue clarifications and interpretations of the Contract Documents in writing. The Engineer shall determine which clarifications and interpretations are necessary to

be consistent with the intent of the Contract Documents. All written interpretations shall be binding on the Contractor.

0700.3.2 – Reference Standards

0700.3.2.1 – Standards, Specifications, Codes, Laws, and Regulations

Reference to standards, specifications, manuals, or codes of any technical society, organization, or association, or to Laws and Regulations, whether such reference be specific or by implication shall mean the standard, specification, manual, code, or Laws and Regulations which are in effect at the time of the opening of Bids unless otherwise specifically stated in the Contract Documents.

0700.3.2.2 - Regulatory Requirements

All Federal, State and Local Codes shall be adhered to where applicable. The Contractor shall obtain all licenses and permits required for his operations without additional cost to the City.

0700.3.3 – Reporting and Resolving Discrepancies

0700.3.3.1 – Reporting Discrepancies

If, during the performance of the Work, the Contractor discovers any conflict, error, ambiguity, or discrepancy within the Contract Documents or between the Contract Documents and any provision of any Law or Regulation applicable to the performance of the Work or of any standard, specification, manual or code, or of any instruction to any Supplier, the Contractor shall immediately report it to the Engineer in writing. The Contractor shall not proceed with the Work until an amendment or supplement to the Contract Documents has been issued.

0700.3.3.2 – Resolving Discrepancies

Except as may be otherwise specifically stated in the Contract Documents, the provisions of the Contract Documents shall take precedence in resolving any conflict, error, ambiguity, or discrepancy between the provisions of the Contract Document and:

a) the provisions of any standard, specification, manual, code, or instruction; or
b) the provisions of any Laws and Regulations applicable to the performance of the Work.

0700.3.4 – Amending and Supplementing Contract Documents

0700.3.4.1 – Amending the Contract Documents

The Contract Documents may be amended to provide for additions, deletions, and revisions in the Work or to modify the terms and conditions in the following ways:

a) Written Supplemental Agreement
b) Change Order

0700.3.4.2 – Supplementing Contract Documents

The requirements of the Contract Documents may be supplemented, and minor variations and deviations in the Work may be authorized in the following ways:

a) Field Work Order
b) Engineer's approval of Shop Drawing or Samples
c) Engineer's written interpretation or clarification

0700.3.5 – Reuse of Documents

The Contractor and any Subcontractor, Supplier or other individual or entity performing or furnishing any of the Work under a direct or indirect contract with the City:

a) shall not have or acquire any title to or ownership rights to any of the Drawings, Specifications, or any other documents prepared by or bearing the seal of the Engineer or Engineer's Consultant, including electronic media editions.
b) shall not reuse any Drawings, Specifications, other documents, or copies on extensions of the Project or any other project without the written consent of the City and the Engineer and specific written verification of the Engineer.

This prohibition will survive final payment, completion, and acceptance of the Work, or the termination or completion of the Contract. The Contractor may retain copies of the Contract Documents for record purposes.

0700.4 – AVAILABILITY OF LANDS; SUBSURFACE AND PHYSICAL CONDITIONS

0700.4.1 – Availability of Lands

0700.4.1.1 – Easements and Right-of-Way

The extension of municipal facilities into the undeveloped areas shown on the Drawings may be along easements or rights-of-way now in the process of negotiated acquisition. The Contractor shall not begin construction in these areas until they have received written authorization from the Engineer.

0700.4.1.2 – Unsuccessful Rights-of-Way or Easement Acquisition

In the event that easements and/or right-of-way acquisition negotiations are unsuccessful or delayed, the City reserves the right to deduct the related construction items from this construction contract, without further obligations or change in the contract bid prices.

0700.4.1.3 – Rights-of-Way or Easement Restrictions

When construction is to proceed along or across a limited easement, the City shall inform the Contractor of any restrictions and shall provide markers at the edge of the working areas within the limited easement. The Contractor shall organize and conduct his operations in a manner that will prevent the occurrence of trespassing incidents along the route of contract construction.

0700.4.1.4 – Temporary Lands

The Contractor shall provide for all additional lands and access to these lands that may be required for temporary construction facilities or storage of materials or equipment. The Contractor shall provide to the City a copy of any agreements for the use of these lands for the purposes stated.

0700.4.2 – Subsurface and Physical Conditions

0700.4.2.1 – Reports and Drawings

No subsurface investigations in the Project Site have been performed unless so described in Division 1000 – Special Provisions of the Bidding Documents. If the City in the Bidding Documents provides no subsurface investigation, the Bidder may make such subsurface investigations or tests deemed necessary to determine the work involved in the project at the Bidder's expense. All subsurface investigations shall be coordinated with the City or the Engineer and all utility companies.

0700.4.2.2 – Limited Reliance on Subsurface Data

The Contractor may rely upon the general accuracy of the subsurface data contained in the reports and drawings, but such reports and drawings are not Contract Documents. The

Contractor may not rely upon the subsurface data to make any Claim against the City, Engineer, or any Engineer's Consultants with respect to the following:

a) the completeness of such reports and drawing for the Contractor's purposes, including, but not limited to, any aspects of the means, methods, techniques, sequences, and procedures of construction to be employed by the Contractor, and safety precautions and programs incident thereto; or
b) other data, interpretations, opinions, and information contained in such reports or shown or indicated in such drawings; or
c) any Contractor interpretation of or conclusion drawn from any subsurface data or any other such data, interpretations, opinions, or information.

0700.4.3 – Underground Facilities

0700.4.3.1 – Shown or Indicated

The information and data shown or indicated in the Contract Documents with respect to the underground facilities at the Project Site is based on information and data furnished to the City or Engineer by the owner of the Underground Facilities, including the City, or by others. Unless it is otherwise provided in the Special Provisions:

a) the City and the Engineer shall not be responsible for the accuracy or completeness of any such information or data; or
b) the cost of all the following will be included in the Contract Price, and the Contractor shall have full responsibility for:

    1) reviewing and checking all such information and data,
    2) locating all Underground Facilities shown or indicated in the Contract Documents,
    3) coordination of the Work with the owners of such Underground Facilities, including City, during construction,
    4) contacting Diggers Hotline prior to commencement of work,
    5) the safety and protection of all such Underground Facilities and repairing any damage resulting from the Work.

0700.4.3.2 – Not Shown or Indicated

If the Contractor uncovers an Underground Facility at the Project Site which was not shown or indicated in the Contract Documents or located in the field, the Contractor shall promptly notify the Engineer. The Engineer shall make a determination of the owner of the

Underground Facility and make any changes, if necessary, to accommodate this Underground Facility. The Contractor shall be responsible for the safety and protection of this Underground Facility.

If the Engineer determines a field change is required and additional work is needed, the Engineer will issue a Field Work Order for this change.

0700.4.4 - Surveying

0700.4.4.1 - General

Primary line and grade will be furnished by the City and will be established by the Engineer or authorized representatives at the request of the Contractor. Requests shall be made a minimum of 48 hours in advance. Compensation for "downtime" will not be considered in cases of inadequate advance notice by the Contractor.

0700.4.4.2 - Location of Stakes

In open cut construction, line and grade stakes will be set parallel to the proposed sewer or water main and offset in a manner that will best serve the Contractor's work operations wherever practical. Stakes will be set opposite each sewer appurtenance or water main fitting and change in line and/or grade.

The Contractor shall render whatever assistance may be required by the Engineer and shall arrange his work operations in such manner as to avoid interference with the establishment of primary lines and grades. The Contractor shall check the accuracy of line and grade stakes by means of visual inspection.

0700.4.4.3 - Protection of Survey Stakes

The Contractor shall protect and carefully preserve all known property and survey marks and land monuments and shall notify the Engineer of the nature and location of these markers. The Contractor shall not disturb or destroy such markers until the Engineer has arranged for referencing or perpetuation. The Contractor shall be responsible for the damage or destruction of property or property marks resulting from neglect, misconduct, or omission in the contractor’s manner or method of execution or non-execution of the work, or caused by defective work or the use of unacceptable materials, and shall restore such property or property marks to a condition similar or equal to that existing before such damage or injury was done, by repairing, rebuilding, or replacing it as may be directed, or the contractor shall otherwise make good such damage or destruction in an acceptable manner. If the Contractor fails to do so, the Engineer

may, after the expiration of a period of 48 hours after giving such notice to the contractor in writing, proceed to repair, rebuild or otherwise restore such property or property marks as may be deemed necessary and the cost thereof shall be deducted from any compensation due or which may become due the contractor under the contract.

0700.4.4.4 - Transferring Grades

The Contractor shall be responsible for the accurate transfer of all construction alignment and grades from the primary line and grade as established by the Engineer. In addition, the Contractor shall supply, and have available on site, the proper surveying equipment for the transfer of grades. If a laser is used during piping, a transit will be required to establish the alignment.

0700.5 – BONDS AND INSURANCE

0700.5.1 – Performance, Payment, and Other Bonds

0700.5.1.1 – Performance and Payment Bonds

The Contractor shall furnish a performance and payment Bond, in an amount at least equal to the Contract Price, as security for faithful performance and payment of all Contractors' obligations under the Contract Documents. These Bonds shall remain in effect at least one year after the final payment becomes due, except as provided otherwise by Laws and Regulations or by the Contract Documents. The Contractor shall also furnish such other Bonds as are required by the Contract Documents.

0700.5.1.2 – Acceptable Bonding Companies

All Bonds shall be in the form described by the Contract Documents except as provided by Laws and Regulations, and shall be executed by such sureties as are named in the current list of "Companies Holding Certificates of Authority as Acceptable Sureties on Federal Bonds and as Acceptable Reinsuring Companies" as published in Circular 570 (amended) by the Financial Management Service, Surety Bond Branch, US Department of Treasury. A certified copy of such agent's authority to act must accompany all Bonds signed by an agent.

0700.5.1.3 – Insolvent Surety

If the Surety on any Bond furnished by the Contractor is declared bankrupt or becomes insolvent or its rights to do business in Wisconsin is terminated or it ceases to meet the requirements of Section 0700.5.1.1 – Performance and Payment Bonds, the Contractor shall

within twenty (20) days thereafter substitute another Bond and Surety, both of which comply with the requirements of the Contract Documents.

0700.5.2 – Licensed Sureties and Insurers

All Bonds and insurance required by the Contract Documents to be purchased and maintained by the Contractor shall be obtained from Sureties or insurance companies that are duly licensed or authorized to issue Bonds or insurance policies in Wisconsin for the limits and coverage's so required. Such Sureties and insurance companies shall also meet such additional requirements and qualifications as may be provided in the Supplementary Conditions. Insurers must provide insurance coverage with a Bests' rating of no less than B+VI.

0700.5.3 – Insurance Requirements

0700.5.3.1 – General

The Contractor shall procure and maintain for the duration of the contract insurance against claims for injuries to persons or damages to property which may arise from or in connection with the performance of the work hereunder by the Contractor, his agents, representatives, employees or Subcontractors. The cost of such insurance is the Contractor's responsibility.

0700.5.3.2 – Minimum Scope of Insurance

The Coverage shall be at least as broad as:

a) Insurance Services Office commercial general liability coverage, "occurrence" form number CG 0001.
b) Insurance Services Office form number CA 0001 covering automobile liability, code 1 "any auto" and endorsement CA 0025.
c) Workers' compensation insurance, as required in Wisconsin State Statues, and employers liability insurance.

0700.5.3.4 – Minimum Limits of Insurance

The Contractor shall maintain limits no less than:

a) *General Liability:* $1,000,000 combined single limit per occurrence for bodily injury, personal injury and property damage. A combination of primary and excess to meet this is acceptable.

b) *Automobile Liability:* $1,000,000 combined single limit per accident for bodily injury and property damage.
c) *Workers' Compensation and Employers Liability:* Workers' compensation limits as required by Wisconsin State Statutes and employer liability limits of $500,000 per accident.

0700.5.4 – Deductibles and Self-Insured Retentions

Any deductibles or self-insured retentions must be declared to and approved by the City. At the option of the City, either:

a) the insurer shall reduce or eliminate such deductible or self-insured retentions as respects the City, its officers, officials and employees; or
b) the Contractor shall procure a bond guaranteeing payment of losses and related investigations, claim administration and defense expenses.

0700.5.5 – Other Insurance Provisions

The policies are to contain, or be endorsed to contain, the following provisions:

a) General Liability and Automobile Liability Coverage

    1) The City, its officers, officials, employees and volunteers are to be covered as insureds for: liability arising out of activities performed by or on behalf of the Contractor; products and completed operations of the Contractor; premises owned, occupied or used by the Contractor; and automobiles owned, leased, hired or borrowed by the Contractor. The coverage shall contain no special limitations on the scope of protection afforded to the City, its officers, officials, employees or volunteers.
    2) The Contractor's insurance coverage shall be primary insurance as respects the City, its officers, officials, employees and volunteers. Any insurance or self-insurance maintained by the City, its officers, officials, employees or volunteers shall be excess of the Contractor's insurance and shall not contribute with it.
    3) Any failure to comply with reporting provisions of the policies shall not affect coverage provided to the City, its officers, officials, employees or volunteers.
    4) The Contractor's insurance shall apply separately to each insured against whom claim is made or suit is brought, except with respect to the limits of the insurer's liability.

b) Workers' Compensation and Employers Liability Coverage

1) The insurer shall waive all rights to subrogation against the City, its officers, officials, employees and volunteers for losses arising from work performed by the Contractor for the City.

c) All Coverages

1) Each insurance policy required by this clause shall be endorsed to state that coverage shall not be suspended, voided, canceled by either party, reduced in coverage or in limits except after 30 days prior written notice by certified mail, return receipt requested, has been given to the City.

d) Subcontractors

1) Contractor shall include all subcontractors as insureds under its policies or shall furnish separate certificates and endorsements for each subcontractor. All coverages for subcontractors shall be subject to all of the requirements stated herein.

0700.5.6 – Verification of Coverage

The Contractor shall furnish the City with certificates of insurance and with original endorsements effecting coverage required by this clause. The certificates and endorsements for each insurance policy are to be signed by a person authorized by that insurer to bind coverage on its behalf. The certificates and endorsements are to be on forms provided by the City and are to be received and approved by the City before work commences. The City reserves the rights to require complete, certified copies of all required insurance policies, at any time. The endorsement and certificate forms are included in the Invitation for Bids for this project. The City's failure to notice or notify the Contractor of any coverage deficiencies that may be apparent in the documents submitted to the City shall not relieve the Contractor of responsibility to provide coverages required in this contract.

0700.5.7 – Indemnification

The Contractor shall pay all damages for injury to real or personal property, for any injury sustained, by any person, growing out of or on account of, or in consequence of this agreement, whether such damages for injury to any property or any person are due or claimed to be due to any joint or passive negligence of the City, its officers, agents or employees, that is in

the nature of a legal liability, and, except in cases of the City's sole negligence, the Contractor hereby agrees to indemnify and save the City harmless against all suits or actions of every name and description brought against said City for person or persons, caused by said contractor, his servants , agents or employees in the execution of said work, or by or in consequence of any negligence in guarding the same; or by or on account of any omission or act of said Contractor, his agents or employees. It is further agreed that the Contractor shall, at the option of the City, defend the City of Altoona with appropriate counsel and shall bear all costs and expenses, including the expense of counsel, in the defense of any suit arising hereunder. The Contractor shall also be responsible for all materials delivered and work performed until completion and acceptance of the entire work, except for any completed unit of work which may have been accepted under the contract.

0700.5.8 – Employees' Claims

The Contractor hereby agrees to indemnify, keep and save harmless said City from all claims, judgments, awards and costs which may in anyway come against said City by reason of any accidental injuries or death suffered by any of its employees or any subcontractor employed by him in and about the performance of this contract.

0700.6 – CONTRACTOR'S RESPONSIBILITIES

0700.6.1 – Supervision

The Contractor shall supervise, inspect, and direct the Work competently and efficiently, devoting such attention and applying such skills and expertise as may be necessary to perform the Work in accordance with the Contract Documents. The Contractor shall be solely responsible for the means, methods, techniques, sequences, and procedures of construction. The Contractor shall be responsible to see that the completed work complies accurately with the Contract Documents.

0700.6.2 – Superintendence

At all times during the progress of the Work, the Contractor shall assign a competent resident superintendent or foreman who shall not be replaced without written notice to the City and Engineer except under extraordinary circumstances. The superintendent or foreman will be the Contractor's representative on the Project Site and shall have the authority to act on the behalf of the Contractor. All communications given or received from the superintendent or foreman shall be binding on the Contractor.

0700.6.3 – Labor

The Contractor shall provide competent, suitably qualified personnel to layout and construct the Work as required by the Contract Documents. The Contractor shall maintain good discipline and order at the Project Site.

0700.6.4 – Working Hours

Except as otherwise required for the safety or protection of persons or the Work or property at the Project Site and except as otherwise stated in the Contract Documents, all Work at the Project Site shall be during regular work hours. Regular work hours in the City of Altoona shall be from 7:00 a.m. to 7:00 p.m. The Contractor will not be permitted to work on Sunday or any legal holiday without the City's written consent given after prior written notice to the Engineer.

0700.6.5 – Services, Materials and Equipment

0700.6.5.1 – General

The Contractor shall provide and assume full responsibility for all services, materials, equipment, labor, transportation, construction equipment and machinery, tools, appliances, fuel, power, light, heat, telephone, water, sanitary facilities, temporary facilities, and all other facilities and incidentals necessary for the performance, testing, startup and completion of the Work.

0700.6.5.2 – Material and Equipment

All materials and equipment incorporated into the Work shall be as specified or, if not specified, shall be of high quality, new and unused unless otherwise provided in the Contract Documents. All warranties and guarantees specifically called for in the Specifications shall expressly run to the benefit of the City. If required by the Engineer, the Contractor shall furnish satisfactory evidence (including reports of required tests) as to the source, kind and quality of the materials and equipment. All materials and equipment shall be stored, applied, installed, connected, erected, protected, used, cleaned, and conditioned in accordance with instructions of the applicable Supplier, except as otherwise may be provided in the Contract Documents.

0700.6.5.3 – Inspection of Materials and Equipment

The Engineer reserves the right to inspect and accept or reject the use of any improper equipment or materials. If rejected, the equipment or materials shall be removed from the site immediately, and at no cost to the City. The Contractor shall allow the Engineer adequate time

for inspection of equipment and material. No compensation will be paid for delays caused by the inspection, whether or not the materials or equipment are accepted.

0700.6.5.4 - Delivery of Approved Materials

The Contractor shall deliver no materials to the Project Site without prior approval. The Contractor shall request permission to deliver materials two (2) days in advance, and the request shall include the amount of material to be delivered and a proposed storage location.

0700.6.5.5 - Payment for Delivered Materials

If payment is requested on the basis of materials and equipment not incorporated in the Work but delivered and suitably stored at the Project Site, the Application for Payment shall also be accompanied by a bill of sale, invoice or other documentation warranting that City has received the materials and equipment free and clear of all Liens, charges, security interests, and encumbrances (which are hereinafter in these General Conditions referred as "Liens"), and evidence that the materials and equipment are covered by appropriate property insurance and other arrangements to protect City's interest therein, all of which must be approved by the City.

0700.6.5.6 – Convict Made Materials

No materials manufactured or produced in a penal or correctional institution shall be incorporated into the project under this contract.

0700.6.6 – Progress Schedule

The Contractor shall adhere to the progress schedule established in accordance with Section 0700.2.5.1 of the General Conditions. The Contractor shall submit to the Engineer for acceptance any proposed adjustments in the progress schedule that will not result in changing the Contract Times. Such adjustments will conform to the progress schedule and will comply with any other requirements of the Contract Documents.

0700.6.7 – Substitutes and “Or-Equals”

0700.6.7.1 - General

Whenever an item of material or equipment is specified or described in the Contract Documents by using the name of a proprietary item or the name of a particular Supplier, the specification or description is intended to establish the type, function, appearance and quality required. Unless the specification or description contains or is followed by the words reading that

no like, equivalent, or “or-equal” item or no substitution is permitted, other items of material or equipment of other Suppliers may be submitted to the Engineer for review.

0700.6.7.2 – “Or-Equal” Items

It is the Engineer’s sole discretion if an item of material or equipment proposed by the Contractor is functionally equal to that named and sufficiently similar so that no change in related Work will be required, it may be considered by the Engineer as an “or-equal” item. A proposed item of material or equipment will be considered functionally equal to an item so named if:

a) in the exercise of reasonable judgment the Engineer determines that:
    1) it is at least equal in quality, durability, appearance, strength, and design characteristics
    2) it will reliably perform at least equally well the function imposed by the design concept of the completed Project as a functioning whole, and;

b) the Contractor certifies that:
    1) there is no increase in cost to the City; and
    2) it will conform substantially, even with deviations, to the detailed requirements of the item named in the Contract Documents.

0700.6.7.3 – Substitute Items

0700.6.7.3.1 - General

It is the Engineer’s sole discretion if an item of material or equipment proposed by the Contractor does not qualify as an “or-equal” item, it will be considered a proposed substitute item.

0700.6.7.3.2 – Submittals for Substitute Items

The Contractor shall submit sufficient information to allow the Engineer to determine that the item of material or equipment proposed is essentially equivalent to that named and an acceptable substitute. Requests for review of proposed substitute items of materials or equipment will not be accepted by the Engineer from anyone other than the Contractor.

0700.6.7.3.3 – Requests for Substitute Items

The Contractor shall first make a written application to the Engineer for review of a proposed substitute item of material or equipment that the Contractor seeks to furnish or use. The

application shall certify that the proposed substitute item will perform adequately the functions and achieve the results called for by the general design, be similar in substance to that specified, and be suited to the same use as specified. The application will state the extent, if any, to which the use of the proposed substitute item will prejudice the Contractor's achievement of Substantial Completion on time, whether or not use of the proposed substitute item in the Work will require a change in the Contract Documents to adapt the design to the proposed substitute item and whether or not incorporation or use of the proposed substitute item in connection with the Work is subject to payment of any license or royalty.

All variations of the proposed substitute item from that specified will be identified in the application, and available engineering, sales, maintenance, repair, and replacement services indicated. The application will also contain an itemized estimate of all costs or credits that will result directly or indirectly from the use of such substitute item, including costs of redesign and claims of other contractors affected by any resulting change, all of which will be considered by the Engineer in evaluating the proposed substitute item. The Engineer may require the Contractor to furnish additional data about the proposed substitute item.

0700.6.7.4 – Engineer's Evaluation

The Engineer will be allowed a reasonable time within which to evaluate each proposal or submittal. The Engineer will be the sole judge of acceptability. No "or-equal" or substitute item will be ordered, installed, or utilized until the Engineer's review is complete. The Engineer will issue either a Change Order for a substitute or an approved Shop Drawing for an "or-equal" The Engineer will advise the Contractor in writing of any negative determination.

0700.6.7.5 – Special Guarantee

The City may require the Contractor to furnish at the Contractor's expense a special performance guarantee or other surety with respect to any substitute or "or-equal."

0700.6.7.6 – Contractor's Expense

The responsibility for all revisions to the Work required by the substitution and the cost for such revisions, if any, shall be borne solely by the Contractor making the substitution. This responsibility shall include, but not limited to, the following:

1) additional work by other contractors or subcontractors
2) additional design time required by the Engineer or Engineer's Consultant to modify the plans
3) changes to the building structure or room size

4) additional associated devices, connections, wiring, etc. and
5) properly notifying other contractors as to the effect of such substitutions on their contact.

0700.7 – CONCERNING SUBCONTRACTORS, SUPPLIERS AND OTHERS

0700.7.1 – Acceptable Subcontractors or Suppliers

The Contractor shall not employ any Subcontractor, Supplier, or other individual or entity whether initially or as a replacement, against whom the City may have reasonable objection. The Contractor shall not be required to employ any Subcontractor, Supplier, or other individual or entity to furnish or perform any of the Work against whom the Contractor has reasonable objection.

0700.7.2 – City Approval of Subcontractors or Suppliers

The Contractor shall submit a list of Subcontractors, Suppliers, or other individuals or entities to the City in advance for acceptance by the City. The list of Subcontractors, Suppliers, or other individuals or entities shall be submitted by a specified date prior to the Date of Agreement. After the Contractor has submitted a list in accordance with the Supplementary Conditions, the City's acceptance of any such Subcontractor, Supplier, or other individuals or entities on the list may be revoked on the basis of reasonable objection after due investigation. The Contractor shall submit an acceptable replacement for the rejected Subcontractor, Supplier, or other individual or entities prior to the commencement of the Work. No acceptance of any such Subcontractor, Supplier, or other individual or entity whether initially or as a replacement, shall constitute a waiver of any right of City or Engineer to reject defective Work.

0700.7.3 – Contractors Responsibility

The Contractor shall be fully responsible to the City for all acts and omissions of the Subcontractors, Suppliers, and other individuals or entities performing or furnishing any of the Work just as the Contractor is responsible for the Contractor's own acts and omissions. Nothing in the Contract Documents shall create for the benefit of the Subcontractor, Supplier, or other individual or entity any contractual relationship between the City or the Engineer. Nor shall it create any obligation on the part of the City to pay or see to the payment of any moneys due any such Subcontractor, Supplier, or other individual or entity except as may otherwise be required by the Laws and Regulations.

0700.7.4 – Scheduling and Coordinating Subcontractors and Suppliers

The Contractor shall be solely responsible for scheduling and coordinating the Work of Subcontractors, Suppliers, or other individuals or entities performing or furnishing any of the Work under a direct or indirect contract with the Contractor.

0700.7.5 – Communicating with Engineer

The Contractor shall require all Subcontractors, Suppliers, or other individuals or entities performing or furnishing any of the Work to communicate with the Engineer through the Contractor.

0700.7.6 – Dividing Work

The divisions and sections of the Specifications and the identifications of any Drawings shall not control the Contractor in dividing the Work among the Subcontractors, Suppliers, or delineating the Work to be performed by any specific trade.

0700.7.7 – Agreements with Subcontractor and Supplier

All Work performed for the Contractor by a Subcontractor or Supplier will be pursuant to an appropriate agreement between the Contractor and the Subcontractor or Supplier. This agreement shall specifically bind the Subcontractor or Supplier to the applicable terms and conditions of the Contract Documents for the benefit of the City.

0700.7.8 – Patent Fees and Royalties

The Contractor shall indemnify, defend and hold harmless the City, its agents and employees from any or all claims or liabilities for royalties or license fees, auctions, suits, charges, expense, or damages for infringement by reason of the use of any invention, or improvement or material, tools, or plant, or any process or device or combinations of devices used in the construction or incorporated in the Work done under this contract.

0700.7.9 – Permits

Unless otherwise provided in the Special Provisions, the Contractor shall obtain and pay for all construction permits and licenses. The City shall assist the Contractor, when necessary, in obtaining such permits and licenses. The Contractor shall pay all governmental charges and inspection fees necessary for the prosecution of the Work, which are applicable at the time of opening of Bids. The Contractor shall pay all charges of utility owners for connections to the Work, and the City shall pay all charges of such utility owners for related capital costs.

0700.7.10 – Laws and Regulations

0700.7.10.1 – Notices and Compliance

The Contractor shall give all notices and comply with all Laws and Regulations applicable to the performance of the Work. Except where otherwise expressly required by applicable Laws and Regulations, neither the City nor the Engineer shall be responsible for monitoring the Contractor's compliance with any Laws or Regulations.

0700.7.10.2 – Contractor's Responsibility

If the Contractor performs any Work knowing or having reason to know that it is contrary to the Laws or Regulations, the Contractor shall bear all claims, costs, losses, and damages (including but not limited to all fees and charges of engineers, architects, attorneys, and other professionals and all court or arbitration or other dispute costs) arising out of or relating to such Work. However, it shall not be the Contractor's primary responsibility to make certain that the Specifications and Drawings are in accordance with the Laws and Regulations, but this shall not relieve the Contractor of the Contractor's obligations under Section 0700.3.3 of the General Conditions.

0700.7.11 – Taxes

0700.7.11.1 – General

The Contractor shall pay all sales, consumer, use, and other similar taxes as required to be paid by the Contractor in accordance with the Laws and Regulations of the place of the Project which are applicable during the performance of the Work.

0700.7.12 – Use of Site and Other Areas

0700.7.12.1 – Limitation on Use of Site and Other Areas

0700.7.12.1.1 - General

The Contractor shall confine construction equipment, the storage of materials and equipment, and the operations of workers to the Project Site and other areas permitted by the Laws and Regulations. The Contractor shall not unreasonably encumber the Project Site and other areas with construction equipment or other materials or equipment. The Contractor shall assume full responsibility for any damage to any such land or area, or to the owner or occupant of the land, or of any adjacent land resulting from the performance of the Work.

0700.7.12.1.2 – Claims for Damage

Should any claim be made by any such owner or occupant because of the performance of the Work, the Contractor shall promptly settle with such other party by negotiation or otherwise resolve the claim by arbitration or other dispute resolution proceeding or law.

0700.7.12.2 – Removal of Debris During Performance of the Work

During the progress of the Work, the Contractor shall keep the Project Site and other areas free from the accumulation of waste materials, rubbish, and other debris. Removal and disposal of such waste materials, rubbish, and other debris shall conform to the applicable Laws and Regulations.

0700.7.12.3 – Cleaning

Prior to Substantial Completion of the Work, the Contractor shall clean the Project Site and make it ready for utilization by the City. At the completion of the Work, the Contractor shall remove from the Project Site all tools, appliances, construction equipment and machinery, and surplus materials and shall restore to original condition all property not designated for alteration by the Contract Documents.

0700.7.13 – Record Documents

The Contractor shall maintain one record copy of all Drawings, Specifications, Addenda, Change Orders, Field Works Orders, and written interpretations and clarifications in good order and annotated to show changes made during construction. These record documents together with all approved Samples and a counterpart of all approved Shop Drawings will be available to the Engineer for reference. Upon completion of the work, the Contractor shall supply the City with an accurate copy of the plans, as they were constructed (as-built plans). This copy shall be retained by the City and used as final documentation for the Work performed.

0700.7.14 – Safety and Control Facilities

0700.7.14.1 – General

The Contractor shall be solely responsible for the protection and safety of the public and property. OSHA procedures and practices shall be followed at all times. If an unsafe condition develops, the Engineer shall have the right to suspend the work until safe conditions prevail.

The Contractor shall furnish, erect, and maintain traffic control facilities in accordance with the latest revision of Part VI, Traffic Controls for Construction and Maintenance Operations of the Wisconsin Manual of Traffic Control Devices.

0700.7.14.2 – Project Site Traffic Control

The Contractor shall coordinate the project traffic control and street closures as directed by the Engineer. Exact street closures may not be designated on the plans, but should be anticipated by the Contractor. The Contractor shall leave approved barricades and traffic control devices in place during all phases of construction from the time the street is turned over to him until final acceptance by the city. Punch list items can be completed by the Contractor after final acceptance with the approval of the Engineer. This may include all access points to the job site. If other contractors need additional on site barricades or traffic control devices, they will be responsible to furnish them as required. Signs and notification required to prepare the site for paving operations shall be the responsibility of the Contractor.

The Contractor shall properly secure the project site at all times including machinery, barricades, signing, and excavations. The Engineer shall have the right to require improved site security as deemed necessary. Barricades will include the name and telephone number of the Contractor. Project site traffic control shall be incidental to the construction unless an item is specifically bid for Traffic Control in the bid documents.

0700.7.15 – Accident Prevention

Precaution shall be exercised at all times for the protection of persons and property. The safety provisions of applicable laws, building and construction codes shall be observed. Machinery, equipment, and other hazards shall be guarded in accordance with the safety provisions of the Manual of Accident Prevention in Construction, published by the Associated General Contractors of America, to the extent that such provisions are not in contravention of applicable law.

0700.7.16 – Safety Representative

The Contractor shall designate a qualified and experienced safety representative at the Project Site whose duties and responsibilities shall be the prevention of accidents and maintenance and supervision of safety precautions and programs. The Contractor shall provide the City with the name and telephone number of a representative of the construction firm that can be contacted on a 24-hour basis, 7 days per week, in case of emergencies or should safety problems arise during periods when construction operations are not in progress.

0700.7.17 – Emergencies

In emergencies affecting the safety or protection of persons or Work or property at the Project Site or adjacent property, the Contractor is obligated to act to prevent threatened damage, injury or loss. The Contractor shall give the Engineer prompt written notice if the Contractor believes that any significant changes in the Work or variations from the Contract Documents will effect the safety of the Project Site.

0700.7.18 – Shop Drawing and Samples

0700.7.18.1 – Shop Drawing Submittal

The Contractor shall submit Shop Drawings to the Engineer for approval. All submittals shall be identified as the Engineer requires and the Contractor shall submit four (4) Shop Drawings for review and approval. The data shown on the Shop Drawings will be complete with respect to quantities, dimensions, specified performance and design criteria, materials, and similar data for the Engineer to review and approve.

0700.7.18.2 – Sample Submittal

The Contractor shall submit Samples to the Engineer for review and approval. All submittals shall be identified as the Engineer requires and the Contractor shall submit one (1) Sample for review and approval. Each Sample will be identified clearly as to material, Supplier, pertinent data such as catalog numbers, and the use for which it is intended and otherwise as required by the Engineer for review and approval.

0700.7.18.3 – Work Performed Prior to Approval of Shop Drawings or Samples

When a Shop Drawing or Sample is required by the Contract Documents to be submitted to the Engineer for review and approval, any related Work performed prior to the Engineer's review and approval of the pertinent submittal will be at the sole expense and responsibility of the Contractor.

0700.7.18.4 – Submittal Procedures

0700.7.18.4.1 - Verification

Before submitting each Shop Drawing or Sample, the Contractor shall have determined and verified:

a) all field measurements, quantities, dimensions, special performance criteria, installation requirements, materials, catalog numbers, and similar information;
b) all materials with respect to intended use, fabrication, shipping, handling, storage, assembly, and installation pertaining to the Work;
c) all information relative to means, methods, techniques, sequences, and procedures of construction and safety precautions; and
d) Contractor shall also have reviewed and coordinated each Shop Drawing or Sample with other Shop Drawings and Samples and with the requirements of the Contract Documents.

0700.7.18.4.2 – Written Indication of Contractor Review and Approval

Each submittal shall have a written indication that the Contractor has satisfied the Contractor's obligations under the Contract Documents with respect to the Contractor's review and approval of that submittal.

0700.7.18.4.3 – Written Notice of Variations

With each submittal, the Contractor shall give the Engineer specific written notice of variations, if any, that the Shop Drawing or Sample submitted may have from the requirements of the Contract Documents. This notice shall be in a written communication separate from the submittal and shall cause a special notation to be made on each Shop Drawing and Sample submitted to the Engineer for review and approval of each such variation.

0700.7.18.5 – Engineer's Review

0700.7.18.5.1 – Timely Review

The Engineer will review and approve the Shop Drawings and Samples in a timely manner. The Engineer's review and approval will only determine if the items covered by the submittals will, after installation or incorporation in the Work, conform to the information given in the Contract Documents and be compatible with the design concept of the completed project.

0700.7.18.5.2 – Engineer's Approval of Construction Techniques

The Engineer's review and approval will not extend to the means, methods, techniques, sequences, or procedures of construction, or to the safety precautions necessary for construction. The review and approval of a separate item will not indicate approval of the assembly in which the item functions.

0700.7.18.6 – Resubmittal Procedures

The Contractor shall make corrections required by the Engineer and return the required number of corrected copies of Shop Drawing and submit the required new Samples for review and approval. The Contractor shall direct attention in writing to revisions other than the corrections called for by the Engineer on previous submittals.

0700.7.19 – Continuing the Work

The Contractor shall carry on the Work and adhere to the progress schedule during all disputes or disagreements with the City. No Work shall be delayed or postponed pending resolution of any disputes or disagreements except as the City and Contractor may otherwise agree in writing.

0700.7.20 – Contractor's General Warranty and Guarantee

0700.7.20.1 – General

The Contractor warrants and guarantees to the City, Engineer, and Engineer's Consultants that all Work will be done in accordance with the Contract Documents and will not be defective. The Contractor hereby guarantees all the work furnished under this contract against any defect in workmanship or materials for a period of one year, except that all concrete work shall be guaranteed for three years, following the date of final acceptance of the work by the City.

0700.7.20.2 – Exclusions

The Contractor's warranty and guarantee excludes defects or damaged caused by:

a) abuse, modification, or improper maintenance or operation by persons other than the Contractor, Subcontractor, Suppliers, or other individual or entity for whom the Contractor is responsible; or
b) normal wear and tear under normal usage.

0700.7.20.3 – Obligations

The Contractor's obligation to perform and complete the Work in accordance with the Contract Documents shall be absolute. None of the following will constitute an acceptance of Work that is not in accordance with the Contract Documents or a release of the Contractor's obligation to perform the Work in accordance with the Contract Documents:

a) observations by Engineer;
b) recommendation by Engineer or payment by City of any progress or final payment;
c) the issuance of a certificate of Substantial Completion by Engineer or any relative payment by the City;
d) use or occupancy of the Work by the City;
e) any acceptance by the City or any failure to do so;
f) any review and approval of a Shop Drawing or Sample submitted or the issuance of a notice of acceptability by the Engineer;
g) any inspection, test, or approval by others; or
h) any correction of defective Work by the City.

0700.7.20.4 – Repairs

Under this warranty and guarantee, the Contractor agrees to make good without delay, at his own expense, any failure of any such work due to faulty materials, construction or installation or the failure of any such equipment to successfully perform all the Work put upon it within the limits of the specifications and further shall make good any damage to any part of the work caused by such failure.

0700.7.21 – Indemnification

The Contractor shall pay all damages for injury to real or personal property, for any injury sustained, by any person, growing out of or on account of, or in consequence of this agreement, whether such damages for injury to any property or any person are due or claimed to be due to any joint or passive negligence of the City, its officers, agents or employees, that is in the nature of a legal liability, and, except in cases of the City's sole negligence, the Contractor hereby agrees to indemnify and save the City harmless against all suits or actions of every name and description brought against said City for person or persons, caused by said contractor, his servants , agents or employees in the execution of said work, or by or in consequence of any negligence in guarding the same; or by or on account of any omission or act of said Contractor, his agents or employees. It is further agreed that the Contractor shall, at the option of the City, defend the City of Altoona with appropriate counsel and shall bear all costs and expenses, including the expense of counsel, in the defense of any suit arising hereunder. The Contractor shall also be responsible for all materials delivered and work performed until completion and acceptance of the entire work, except for any completed unit of work which may have been accepted under the contract.

0700.7.22 - Punch List Items

Upon completion of the final inspection, the Contractor will be given a list of delinquent completion items (Punch List). This punch list shall be completed as soon as possible and before final payment and acceptance will be made. The City will inspect the Work completed the following spring for repairs that the Contractor must make.

0700.7.23 - Protection of Existing Facilities

All surface structures and features, including buildings, pavements, trees and shrubs, shall be properly protected against damage. All existing gas pipes, water pipes, steam pipes, electric and telephone conduits, sewers, drains, fire hydrants, and other surface or subsurface structures, railway or railroad tracks, which do not require change in location shall be carefully supported and protected from injury by the Contractor. All such work must be done by, at the expense of the Contractor, and according to his own plans, subject always to the approval of the Engineer and appropriate utility owner.

In case of damage or injury to any of these surface or subsurface structures, the Contractor will be required to make replacements or repairs to the satisfaction of the Engineer at no additional cost to the City.

0700.8 – OTHER WORK

0700.8.1 – Related Work at Project Site

0700.8.1.1 – Work by Others at Project Site

The City may perform other work related to the Project at the Project Site by the City's employees, or let other direct contracts, or have other work performed by utility owners. If such other work is not noted in the Contract Documents, then written notice will be given to the Contractor prior to starting any such work.

0700.8.1.2 – Access to Project Site

The Contractor shall afford each other contractor, utility owner and the City proper safe access to the Project Site and a reasonable opportunity for the introduction and storage of materials and equipment and the execution of such other work and shall properly coordinate the Work with theirs. Unless otherwise provided in the Contract Documents, the Contractor shall do all cutting, fitting, and patching of the Work that may be required to properly connect or otherwise make its several parts come together and properly integrate with such other work. The Contractor shall not endanger any work by others by cutting, excavating, or otherwise altering their work and will only cut or alter their work with the written consent of the Engineer and the

others whose work will be affected. The duties and responsibilities of the Contractor under this paragraph are for the benefit of such utility owners and other contractors to the extent that there are comparable provisions for the benefit of the Contractor in said direct contracts between the City and such utility owners and other contractors.

0700.8.1.3 – Reporting of Delays, Defects or Deficiencies in Work by Others

If the proper execution or results of any part of the Contractor's Work depends upon work performed by others, the Contractor shall inspect such other work and promptly report to Engineer in writing any delays, defects, or deficiencies in such other work that renders it unavailable or unsuitable for the proper execution of the Contractor's Work. The Contractor's failure to report this will constitute an acceptance of such other work as fit and proper for integration with the Contractor's Work except for latent defects and deficiencies in such other work.

0700.8.2 – Coordination

The Contractor shall coordinate all construction activity with Xcel Gas, Xcel Electric, Charter Communications, AT&T, and any other private utility company that have utilities within the Project Site. Where directed by the Engineer, time shall be allowed after surface removal for the underground utility contractors to complete their work before placing base course and surfacing. The Contractor shall coordinate his work with other street and utility contractors.

0700.9 – CITY'S RESPONSIBILITIES

0700.9.1 – Communication to Contractor

Except as otherwise provided in these General Conditions, the City shall issue all communications to the Contractor through the Engineer.

0700.9.2 – Replacement of Engineer

In case of termination of the employment of the Engineer, the City shall appoint an employee or other authorized representative to whom the Contractor makes no reasonable objection, whose status under the Contract Documents shall be that of the former Engineer.

0700.9.3 – Furnish Data

The City shall promptly furnish the data required of the City under the Contract Documents.

0700.9.4 – Lands and Easements

The City's duties in respect to providing lands and easements and providing engineering surveys set forth in Section 0700.4 of the General Conditions.

0700.9.5 – Limitations on City's Responsibilities

The City shall not supervise, direct, or have control or authority over, nor be responsible for, Contractor's means, methods, techniques, sequences, or procedures of construction, or the safety precautions and programs, or for any failure of the Contractor to comply with the Laws and Regulations applicable to the performance of the Work. The City will not be responsible for the Contractor's failure to perform the Work in accordance with the Contract Documents.

0700.10 – ENGINEER'S STATUS DURING CONSTRUCTION

0700.10.1 – City's Representative

The Engineer will be the City's representative during the construction period. The duties and responsibilities and the limitations of authority of the Engineer as the City's representative during construction are set forth in the Contract Documents and will not change with written consent of the City and Engineer.

0700.10.2 – Visits to Project Site

0700.10.2.1 – Engineer Visits to Project Site

The Engineer will make visits to the Project Site at intervals appropriate to the various stages of construction as the Engineer deems necessary in order to observe as an experienced and qualified design professional the progress that has been made and the quality of the various aspects of the Contractor's executed Work. Based on information obtained during such visits and observations, the Engineer, for the benefit of the City, will determine if the Work is proceeding in accordance with the Contract Documents. Based on such visits and observations, the Engineer will keep the City informed on the progress of the Work and will guard the City against defective Work.

0700.10.2.2 – Limitations on Engineer's Visits to Project Site

During the Engineer's visits and observations to the Project Site, the Engineer will not supervise, direct, control, or have authority over or be responsible for the Contractor's means, techniques, sequences, or procedures of construction, or the safety precautions, or for any

failure of the Contractor to comply with Laws and Regulations applicable to the performance of the Work.

0700.10.3 – Project Representative

The Engineer or authorized designee may act as the Resident Project Representative to provide more extensive observation of the Work.

0700.10.4 – Clarifications and Interpretations

The Engineer will issue with reasonable promptness such written clarifications or interpretations of the requirements of the Contract Documents as the Engineer may determine necessary. These determinations shall be consistent with the intent and reasonably inferable from the Contract Documents. Such written clarifications and interpretations will be binding on the City and Contractor.

0700.10.5 – Authorized Variations of Work

The Engineer may authorize minor variations in the Work from the requirements of the Contract Documents. These minor variations may be accomplished with a Field Work Order and will be binding on the City and also on the Contractor, who shall promptly perform the Work involved.

0700.10.6 – Rejecting Defective Work

The Engineer will have the authority to disapprove or reject Work which the Engineer believes to be defective, or that the Engineer believes will not produce a completed Project that conforms to the Contract Documents. The Engineer will also have the authority to require special inspection or testing of the Work.

0700.10.7 – Determination for Unit Price Work

The Engineer will determine the actual quantities and classifications of Unit Price Work performed by the Contractor. The Engineer will review with the Contractor the Engineer's preliminary determinations of quantities and forward a recommendation to the City of an Application for Payment.

0700.10.8 – Decisions on Requirements of Contract Documents and Acceptability of Work

The Engineer will be the initial interpreter of the requirements of the Contract Documents and judge the acceptability of the Work. When functioning as interpreter and judge,

the Engineer will not show partiality to the City or Contractor and will not be liable in connection with any interpretation or decision rendered in good faith in such capacity.

0700.10.9 – Limitations on Engineer's Authority and Responsibilities

0700.10.9.1 – Work by Contractor

The Engineer will not supervise, direct, control, or have the authority over or be responsible for the Contractor's means, methods, techniques, sequences, or procedures of construction, or the safety precautions and programs, or for the failure of the Contractor to comply with the Laws and Regulations applicable to the performance of the Work. The Engineer will not be responsible for the Contractor's failure to perform the Work in accordance with the Contract Documents.

0700.10.9.2 – Acts or Omissions by Contractor

The Engineer will not be responsible for the acts or omissions of the Contractor or of any Subcontractor, any Supplier, or any other individual or entity performing any of the Work.

0700.10.9.3 – Engineer's Consultants, Resident Project Representatives

The limitations upon authority and responsibility set forth in Section 0700.10.9 of these General Conditions shall also apply to the Engineer's Consultants and Resident Project Representative.

0700.11 – CHANGES IN THE WORK

0700.11.1 – Authorized Changes in the Work

Without invalidating the Agreement and without notice to any surety, the City may, at any time order additions, deletions, or revisions in the Work by a Change Order or Field Work Order. Upon receipt of this document, the Contractor shall promptly proceed with the Work involved, which will be performed under the applicable conditions of the Contract Documents.

0700.11.2 – Execution of Change Orders

The City and the Contractor shall execute appropriate Change Orders recommended by the Engineer covering changes in the Work, which have been authorized.

0700.11.3 – Estimated Quantities

The City reserves the right to increase or decrease the amount of any quantity without a change in the unit bid price. The City does not guarantee that the quantities given on the Bid Form are exact, and will not take delivery of excess materials at the completion of the contract.

0700.11.4 – Notification to Surety

If notice of any change affecting the general scope of the Work or the provisions of the Contract Documents is required by the provisions of the Bond to be given to a Surety, the giving of such notice will be the Contractor's responsibility. The amount of each applicable Bond will be adjusted to reflect the effect of any such change.

0700.12 – LIQUIDATED DAMAGES

0700.12.1 - General

Should the Contractor fail to substantially complete the work within the time agreed upon (see Division 1000 – Special Provisions) or within such extra time as may have been allowed by extensions, there shall be deducted from any monies due or that may become due the Contractor, the sum indicated in Division 1000 for each and every calendar day, including Sundays and holidays, that the work remains uncompleted.

0700.12.2 – Right to Enforce Damages

This sum shall be considered and treated not as a penalty but as fixed and agreed upon liquidated damages due the City from the Contractor by reason of inconvenience to the public, added cost of engineering and supervision, maintenance of detours and other items which have caused an expenditure of public funds resulting from the Contractor's failure to complete the Work within the time specified in the contract.

0700.12.3 – Non-Waiving of Rights

Permitting the Contractor to continue and finish the work or any part of it after the time fixed for its completion, or after the date to which the time for completion may have been extended, shall in no way operate as a waiver on the part of the City of any of its rights under the contract.

0700.13 – PARTIAL PAYMENTS; PUNCH LISTS; LIENS

0700.13.1 – Partial Payment Submittal

The Contractor shall be responsible to submit to the City, a monthly partial payment estimate of work performed to date. The City will make payment, based on the verified amount of work completed, normally within 15 days of receipt of the estimate.

0700.13.2 – Payment for Delivered Materials

If payment is requested on the basis of materials not incorporated in the Work but delivered and suitably stored at the Project Site or at another location agreed to in writing, the Application for Payment shall also be accompanied by a bill of sale, invoice, or other documentation warranting the City has received the materials and equipment free and clear of all Liens and evidence that the materials and equipment are covered by appropriate property insurance or other arrangements to protect the City's interest therein, all of which must be satisfactory to the City.

0700.13.3 – Retainage on Partial Payments

The City will retain an amount equal to 5% of the total project estimate of work completed to date until 50% of the work has been completed. At 50% completion, subsequent partial payments by the City to the Contractor shall be made in full to the Contractor and no additional amounts may be retained unless the Engineer certifies that the Work is not proceeding satisfactorily, but amounts previously retained shall not be paid to the Contractor. At 50% completion or any time thereafter when the progress of the Work is unsatisfactory, additional amounts may be retained but in no event shall the total retainage be more than 5% of the value of the Work completed. Upon substantial completion of the Work, an amount retained may be paid to the Contractor.

When the Work has been substantially completed except for work which cannot be completed because of weather conditions, lack of materials or other reasons which in the judgement of the City are valid for reasons for noncompletion, the City may make additional payments, retaining at all times an amount sufficient to cover the estimated cost of the Work still to be completed or in the alternative may pay out the entire amount retained and receive from the Contractor guarantees in the form of a bond or other collateral sufficient to ensure completion of the Work.

0700.13.4 – Final Payment

Upon the completion of all the work included under this contract, and satisfactory completion of operation and acceptance tests, and, if required, submission of the Affidavit of Compliance (see "Employees and Wages"), the Engineer will authorize final payment. The said Contractor shall not be entitled to demand or receive final payment for any portion of the

aforesaid work except in the manner set forth in this agreement. Until the Contractor has complied with all the stipulations, provisions, and conditions hereinabove mentioned, and the Engineer has given his certificate to that effect whereupon said City will, at the expiration of 30 days after such completion and delivery of such certificates pay the whole amount of money accruing to said Contractor under this contract, except for such sum or sums of money as may have been already paid, and as may be lawfully retained under any of the provisions of this contract herein set forth.

0700.13.5 – Liens

The person, firm or contractor furnishing labor or materials to be used or consumed in making public improvements or performing public work, including fuel, lumber, machinery, vehicles, tractors, equipment, fixtures, apparatus, tools, appliances, supplies, electrical energy, gasoline, motor oil, lubricating oil, greases, state imposed taxes, premiums for worker's compensation insurance and contributions for unemployment insurance, may have a lien on the money or Bond or warrants due or to become due the Contractor therefor, if the lienor, before payment is made to the Contractor, gives written notice to the City of the claim.

Service of the notice under subsection (1) of 779.15 of the Wisconsin State Statues shall be made by register mail to the City Clerk. A copy of the notice shall be served concurrently by registered mail upon the Contractor.

0700.14 – FIELD WORK ORDERS

0700.14.1 - General

When extra work as defined in Subsection 104.5 of the State of Wisconsin Department of Transportation Standard Specifications for Road and Bridge Construction is to be performed, the Engineer shall issue a Field Work Order. The Field Work Orders shall be paid in one of the following ways:

(a) Agreed upon Lump Sum Basis
(b) Agreed upon Unit Price Basis
(c) Agreed upon Time and Material Basis

0700.14.2 - Time and Material

0700.14.2.1 - General

If the Field Work Order is to be paid on the Time and Material Basis, the Contractor shall be compensated based on Subsection 109.4c of the State of Wisconsin Department of Transportation Standard Specifications for Road and Bridge Construction, current edition.

0700.14.2.2 - Wage Rates

Wage rates shall be paid in accordance with §66.0903 of the Wis. Statutes and Chapter DWD 290 of the Wis. Adm. Code.

0700.14.2.3 - Agreed Upon Field Work Order

At the end of each day, the Contractor's representative shall sign a Field Work Order prepared by the Engineer with labor, materials, and machinery agreed upon for that day of work. No additional items shall be paid unless agreed upon by the Engineer prior to payment.

0700.14.2.4 – Field Work Orders by Subcontractors

If a subcontractor performs a field work order, the City will allow the contractor to markup on work performed by the subcontractor five (5) percent.

0700.15 – SUSPENSION OF WORK AND TERMINATION

0700.15.1 – City May Suspend Work

At any time and without cause, the City may suspend the Work or any portion thereof for a period of not more than 90 consecutive days by notice in writing to the Contractor and Engineer which will fix the date on which the Work will be resumed. The Contractor shall resume the Work on the date so fixed.

0700.15.2 – City May Terminate for Cause

0700.15.2.1 – Causes

The occurrence of any one or more of the following events will justify termination for cause:

a) Contractor’s persistent failure to perform the Work in accordance with the Contract Documents;
b) Contractor’s disregard of Laws and Regulations of any public body having jurisdiction;
c) Contractor’s disregard of the authority of the Engineer; or

d) Contractor's violation in any substantial way of any provisions of the Contract Documents.

0700.15.2.2 - Termination

If one or more of the causes identified in Section 0700.15.2.1 occur, the City may, after giving the Contractor and surety seven days notice, terminate the services of the Contractor. The City shall than exclude the Contractor from the Project Site, and take possession of the Work and of all the Contractor's tools, appliances, construction equipment, and machinery at the Project Site, and use the same to the full extent they could be used by the Contractor (without liability to the Contractor for trespass or conversion), incorporate in the Work all materials and equipment stored at the Project Site or for which the City has paid the Contractor but which are stored elsewhere, and finish the Work as the City deems expedient. In such case, the Contractor shall not be entitled to receive any further payment until the Work is finished. If the unpaid balance of the Contract Price exceeds all claims, costs, losses and damages sustained by the City arising out of or relating to completing the Work, such excess will be paid by the Contractor. If such claims, costs, losses, and damages exceed the unpaid balance, the Contractor shall pay the difference to the City. Such claims, costs, losses, or damages incurred by the City will be reviewed by the Engineer as to their reasonableness and, when so approved by the Engineer, incorporated in a Change Order. When exercising any rights or remedies under this paragraph, the City shall not be required to obtain the lowest price for the Work performed.

0700.15.2.3 – Liability of Contractor After Termination

Where the Contractor's services have been so terminated by the City, the termination will not affect any rights or remedies of the City against the Contractor then existing or which thereafter accrue. Any retention or payment of moneys due the Contractor by the City will not release the Contractor from liability.

0700.15.3 – City May Terminate for Convenience

Upon seven days written notice to the Contractor and Engineer, the City may, without cause and without prejudice to any other right or remedy of City, elect to terminate the Contract. In such case, the Contractor shall be paid (without duplication of any items):

a) for completed and acceptable Work executed in accordance with the Contract Documents prior to the effective date of termination, including fair and reasonable sums for overhead and profit on such Work;
b) for expenses sustained prior to the effective date of termination in performing services and furnishing labor, materials, or equipment as required by the Contract

Documents in connection with uncompleted Work, plus fair and reasonable sums for overhead and profit on such expenses;

c) for all claims, costs, losses, damages incurred in settlement of terminated contracts with Subcontractors, Suppliers, and others; and

d) for reasonable expenses directly attributable to termination.

The Contractor shall not be paid on account of loss of anticipated profits or revenue or other economic loss arising out of or resulting from such termination.

0700.16 – WAGES; REPORTED EARNINGS

0700.16.1 – Wage Rates

The Contractor shall compensate its employees at the prevailing wage rate in accordance with §66.0903 of the Wis. Statutes and Chapter DWD 290 of the Wis. Adm. Code. The Contractor shall maintain weekly payroll records of its employees, subcontractors and agents. The Contractor shall submit these payroll records to the City upon completion of the project along with an affidavit stating that the prevailing wage requirements were met on the project, that the Contractor received evidence of compliance from the subcontractors and agents used on the project, and the names and addresses of those subcontractors and agents. The City may withhold any final payment or retainage until Contractor provides the City with the required payroll records and affidavit of compliance. Failure to comply with this paragraph and the provisions of the laws, regulations and ordinances it references shall constitute default of this contract. Three or more violations of this section will result in disqualification of the contractor from bidding on any City project for a period of three (3) years following such finding by the Altoona City Council.

0700.16.2 – Payroll Records

The Contractor hereby agrees to retain, for at least three years after project completion, all payroll records pertaining to this project and to permit such a random sample to be made by an independent auditor of the City and to cooperate and assist such auditor in such effort.

0700.16.3 – Reported Earnings

The Contractor, if a resident of the State of Wisconsin, shall report the earnings of this work as coming from the City of Altoona.

0700.16.4 – Non-Discriminatory Clause

In connection with the performance of work under this agreement, Contractor agrees not to discriminate against any employee, applicant for employment, or actual or potential recipients of services because of age, race, religion, color, marital status, sexual orientation, sex, handicap as defined in Section 504 of the Americans with Disabilities Act (ADA), developmental disability, or national origin. This provision shall include, but not be limited to, the following: employment, upgrading, demotion or transfer; recruitment or recruitment advertising; layoff or termination; rates of pay or other forms of compensation; and selection for training including apprenticeship.

0700.16.5 – Tax Incremental Finance (TIF) District Requirement

Any person who operates for profit and is paid project costs under Wisconsin Statutes 66.46(2)(f)1.a.,d.,j. and k. in connection with the project plan for a tax incremental district shall notify the department of industry, labor and human relations and the area private industry council under the job training partnership act, 29 USC 1501 to 1798, of any positions to be filled in the county in which the city which created the tax incremental district is located during the period commencing with the date the person first performs work on the project and ending one year after receipt of its final payment of project costs. The person shall provide this notice at least 2 weeks prior to advertising the position.

0700.17 – DETAILS

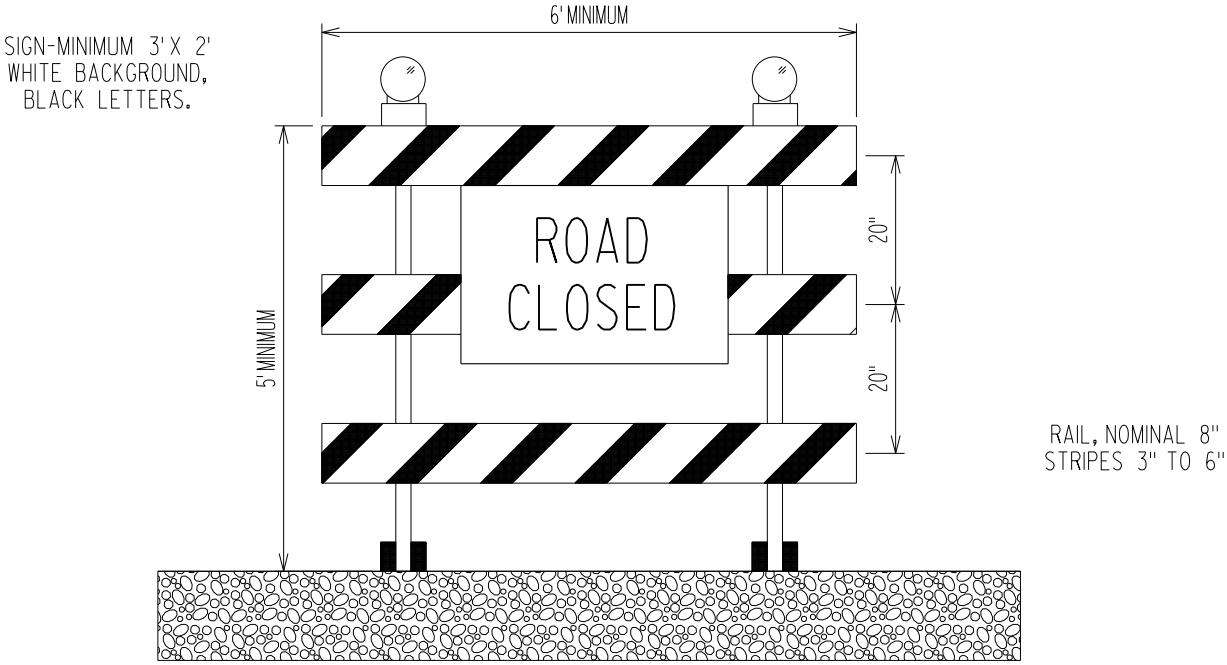

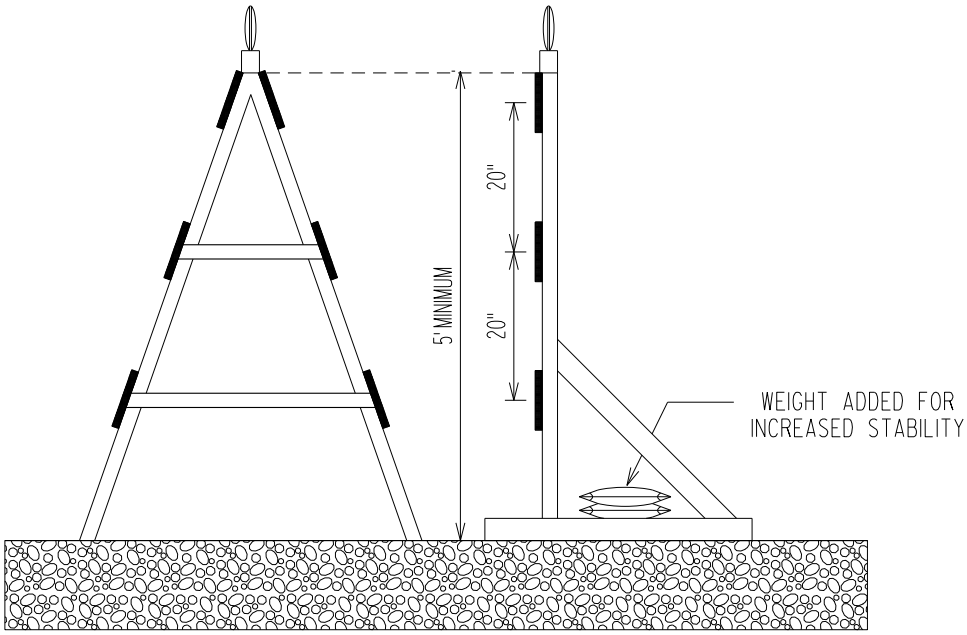

NOTE! *BARRICADES TO HAVE NAME AND TELEPHONE NUMBER AND TO BE REFLECTORIZED WHEN USED AT NIGHT. THEY SHALL CONFORM TO MINIMUM STANDARDS OF AT LEAST ONE MOUNTED FLASHER PER BARRICADE.*

CLASS I BARRICADES

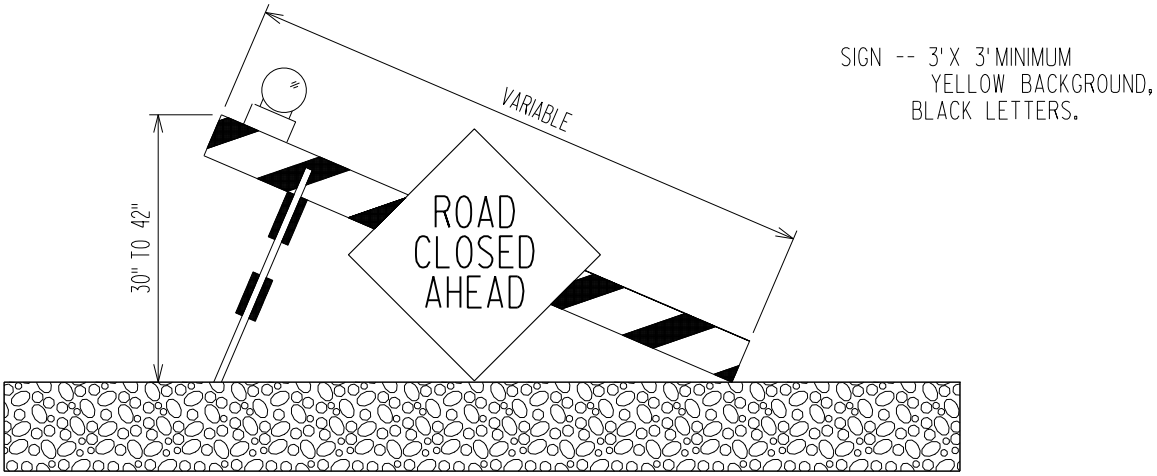

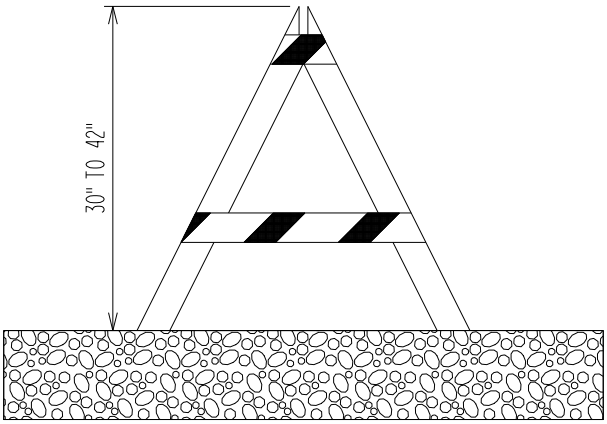

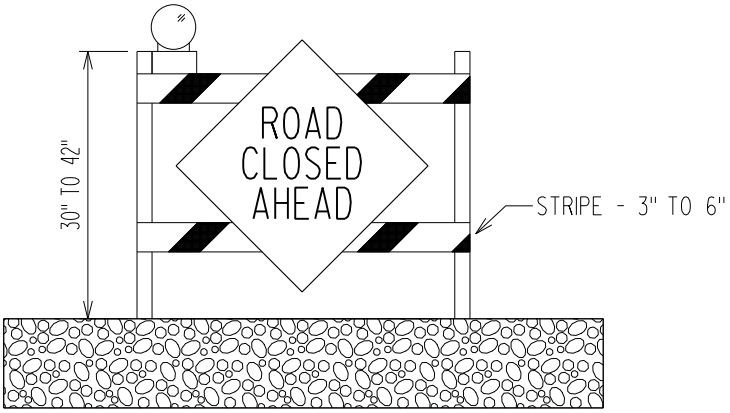

CLASS II BARRICADES

THIS PAGE INTENTIONALLY LEFT BLANK

CITY OF ALTOONA

S P E C I F I C A T I O N S

DIVISION 2100 - SITE PREPARATION

2100.1 - DESCRIPTION

2100.1.1 - General

Work in this section shall consist of clearing, grubbing, removing, disposing, and preparing the construction site for further work on this contract, as shown on the plans and details as provided by this contract. The labor, materials, and equipment provided by the Contractor shall be of the quality, quantity, and condition necessary to complete the work in a **top quality manner.**

All work in this division shall conform to the requirements of comparable sections of the WSSHSC including Sections 201, 202, 203, 204 except as modified within this specification.

2100.2 - MATERIALS

2100.2.1 - Remove Items

No items shall be removed except as shown on the Plans and Specifications or as directed by the Engineer. Removal operations shall not commence until approved by the Engineer.

2100.2.2 - Salvage Items

Existing items designated for salvage by the Engineer shall be removed by the Contractor using reasonable care. All salvaged materials shall be placed in neat piles outside the construction limits at locations designated by the Engineer. Salvaged material shall be used in the new construction only when and as provided in the Special Provisions or elsewhere in the Specifications.

Items which are not designated for salvage shall be removed and disposed of by the Contractor in accordance with WSSHSC 203.2.3.

2100.2.3 - Removal of Traffic Control and Street Signs

All traffic control and street signs which interfere with the work shall be removed by the Contractor using reasonable care. They shall be stored safely on site, and shall be reset by the

Contractor. The signs must be reset before the barricades are removed and the street is open to traffic.

2100.2.4 - Removal of Mailboxes

All mailboxes which interfere with the work shall be removed by the Contractor using reasonable care. They shall be given to their owner for resetting. Any damage to mailboxes due to Contractor's unreasonable care shall be the responsibility of the Contractor to replace at his or her own expense.

2100.2.5 - Removal of Miscellaneous Items

The removal and resetting or disposal of miscellaneous items such as fences, posts, abandoned gas lines, or guardrails, rock gardens, flag poles, basketball poles, and other miscellaneous items, not included in the Schedule of Prices, located within the construction area shall be considered incidental to the street construction. The Contractor shall put the fences, guardrails, or posts back in the original location or as directed by the Engineer. Any damage to the posts, fences, or guardrails shall be repaired or replaced by the Contractor to as good as or better than original condition as directed by the Engineer.

2100.3 - METHODS

2100.3.1 - General

The Contractor shall conform to the methods set forth in this section to complete the work shown on the Plans and Details.

2100.3.2 - Clearing and Grubbing

Clearing and grubbing shall consist of the removal and disposal of all trees, stumps, and roots within the construction area which are shown on the plans or designated for removal by the Engineer. The Engineer shall be responsible to field mark all trees prior to removal. The Contractor shall not remove any trees that have not been marked. If the Engineer designates additional trees to be removed after clearing and grubbing has been completed on the street, the Contractor shall clear and grub these trees at the unit price bid for clearing and grubbing. No additional compensation shall be made for remobilizing to a street for removal of these additional trees. Stumps and roots shall be completely removed under proposed construction areas, including removal to a depth of one foot below subgrade.

To prevent the spread of oak wilt, oak trees shall not be removed or damaged by the Contractor during the period from April 15 through October 15, except as authorized by the

Engineer. No clearing and grubbing of trees shall begin until one day prior to the beginning of construction on the street.

2100.3.3 - Disposal of Wood and Debris

The wood and debris from all clearing and grubbing operations shall be disposed of by the Contractor, at his own expense, at his own dump site, as soon as possible and within three (3) days after the initial clearing. No debris (roots, limbs, logs, stumps, brush, etc.) shall be burned within the City Limits for any project unless prior approval is given by the Engineer. If approved, the Contractor is responsible to acquire all permits from the proper authorities.

The Contractor may be required to remove some diseased trees from the street during this project. The disposal of these trees shall be in accordance with local regulations, including disposal outside the City Limits.

2100.3.4 - Tree Protection

2100.3.4.1 - General

The Contractor shall exercise caution when working near existing trees that are to remain. The Contractor shall work with the Engineer on all project sites to determine the best course of action for working around the existing trees.

2100.3.4.2 - Tree Safe Zone

A tree safe zone shall be established at all trees that are to remain. No mechanical equipment shall be used within five (5) feet of the trunk of an existing tree. The Contractor shall remove the existing sod, add topsoil, and prepare the boulevard for sod using hand tools within the five (5) foot tree safe zone. There will be no additional compensation for providing a safe zone around existing trees or the associated handwork.

On reconstruction projects or as directed by the Engineer or City Forester, the Contractor shall erect high-density polyethylene safety fence within a five (5) foot radius of the tree trunk. The Contractor shall maintain the safety fence during the entirety of the project and shall only remove the fence by the permission of the Engineer or City Forester.

2100.3.4.3 - Pruning of Roots

Where tree roots have been exposed by the construction, the Contractor shall cover the roots with topsoil as soon as possible. If the roots have suffered damage due to the construction, the Contractor shall trim the roots with a saw under the direction of the Engineer.

No roots shall be trimmed without the Engineer present. There will be no additional compensation for trimming the roots or covering the roots around existing trees.

2100.3.4.4 - Trimming Trees or Shrubs

No trees or shrubs shall be trimmed by the Contractor without review by the Engineer. The Contractor shall contact the Engineer or City Forester to meet onsite to discuss the possible trimming of the trees. The Contractor shall notify the City a minimum of 48 hours in advance for trimming of trees.

2100.3.5 - Remove Existing Pavements and Concrete

2100.3.5.1 - General

Prior to construction, the Engineer shall field mark the construction removal limits on all pavements and concrete. The construction removal limits shall be considered the match lines for new to existing areas. If required, these limit lines shall be the location of sawcuts, and the rough edge of the removal shall remain in place until immediately prior to the placement of the pavement. The Contractor shall use reasonable care when doing removals and shall be held responsible for all damages outside the limits as the result of negligence.

2100.3.5.2 - Bituminous and Oiled Pavement Removal

The Contractor shall remove and dispose of all existing bituminous and oiled surfaces as shown on the plans or as directed by the Engineer. The existing surface shall be removed with care causing minimal damage or removal of the existing aggregate base. If in the opinion of the Engineer, excessive amounts of existing aggregate base were removed, it shall be replaced by the Contractor at his own expense.

2100.3.5.3 - Driveway Removals

All driveways shall be marked for sawcutting after the concrete work has been completed. Initial marking of driveways by the Engineer shall be used by the Contractor to remove material before the concrete work has been completed. No additional compensation shall be made to the Contractor for sawcutting after the concrete work has been completed or associated removals. The sawcutting and removals shall be paid for as Sawing, Remove Bituminous Surface or Remove Concrete Pavement.

2100.3.5.4 - Concrete Pavement Removal

The Contractor may use a drop weight or other type of machinery for breaking concrete, if approved by the Engineer. The Contractor shall be solely responsible for any damage caused by its use, and the Engineer reserves the right to order its use discontinued at any time.

2100.3.5.5 - Sidewalk Removal

Existing sidewalk shall remain in place until the new sanitary sewer main and water main have been installed. The Contractor shall maintain pedestrian access via the sidewalk at all times. The Contractor shall remove the existing sidewalk only after all utilities have been completed or as directed by the Engineer. The removal and disposal of this sidewalk, and any other sidewalk removed as directed by the Engineer, shall be paid for on the square yard basis of Removing Concrete Sidewalk.

2100.3.5.6 - Curb and Gutter or Curb Removal

The contractor shall remove the curb and gutter or curb as marked by the Engineer. The removal and disposal of the curb and gutter or curb shall be paid for on the lineal foot basis of Remove Curb and Gutter or Remove Curb.

2100.3.6 - Scarify Oil Surface

In areas where the existing aggregate base has a thin oil layer or a newly oiled surface, the Contractor shall scarify the existing oil surface. The existing surface shall be scarified as shown on the Plans and Details or as directed by the Engineer. The Contractor shall use approved scarification methods which consolidate the existing oil surface into the existing aggregate base course. In addition, the surface shall be graded, compacted, and prepared for placement of a bituminous surface course.

2100.3.7 - Removal of Manhole Castings

Prior to the beginning of any excavation or grading on a street, the Contractor shall remove all manhole castings from the manholes and cover the manhole opening with a steel plate suitable to support traffic. Manhole castings shall not be set to finished grade until just prior to the placing of the surface course of asphaltic paving.

2100.3.8 - Pulverize Asphalt Surface

2100.3.8.1 - General

This work shall consist of constructing base course utilizing in-place pulverizing and relaying of the existing asphaltic surface and base course over the roadbed as shown on the plans and as hereinafter provided.

2100.3.8.2 - Pulverizing

The existing asphaltic surface shall be pulverized full depth and to a minimum of 97 percent passing a 2-inch screen. The existing crushed aggregate base course shall also be pulverized to the depth directed by the Engineer and mixed with the asphaltic material.

2100.3.8.3 – Preparation of Pulverized Base Course

2100.3.8.3.1 – Preparation of Pulverized Base Course

Immediately after pulverizing, the material shall be graded in accordance to the plans and typical finished section or as directed by the Engineer. The preparation of the pulverized material shall be accomplished using a grader as directed by the Engineer.

2100.3.8.3.2 – Transferring and Preparation of Pulverized Material

Upon completion of pulverizing, the Contractor shall grade the street in accordance to the plans and finished typical section or as directed by the Engineer. The Contractor shall stockpile the pulverized aggregate material by windrowing or other approved methods, excavate excess material, prepare the subbase, transfer the stockpiled pulverized aggregate base course to the prepared subbase, and prepare the base course for asphalt pavement.

2100.3.8.4 - Compaction

The relaid material shall be immediately compacted in the following sequence: first with either a rubber tired roller or vibratory pads foot roller and second with a vibratory steel roller. Water shall be added prior to and during compaction as required. Each layer shall be compacted to the extent required for Standard Compaction in Section 30415 of the Wisconsin Department of Transportation Standard Specifications.

At the completion of each working day, the ends of the pulverized and transfer base course shall be as close as practical to the same station for both traffic lanes.

2100.3.8.5 - Compaction Equipment

The Contractor shall use the following compaction equipment based on the depth of material that has been pulverized:

(a) For a compacted depth of pulverized material, up to six inches, compaction equipment shall be in accordance with Section 304.4.4 of the Wisconsin Department of Transportation Standard Specifications.

(b) For a compacted depth of pulverized material, greater than six inches and up to eight inches, a minimum 25-ton rubber tired roller with 90 psi tire pressure or 25,000 lb. pads foot vibratory roller, and a minimum 8-ton vibratory steel roller shall be used.

(c) For compacted depths greater than 8 inches, split lift compaction according to the above described methods will be required.

2100.3.8.6 - Removal of Bricks

The Contractor may encounter areas of pavement during the pulverizing process with underlying bricks from the original street surface. Removal and disposal of the bricks shall be considered incidental to the item of Pulverize and Preparation of Base Course or the item of Pulverize, Transfer, and Preparation of Base Course.

2100.3.9 – Subcut Road, Place Fabric & Granular Backfill

In locations, as determined by the Engineer, where the subgrade is too wet or unstable to place crushed aggregate base course, the Contractor shall subcut these locations two (2) feet below the proposed subgrade, place filter fabric, and granular backfill. The filter fabric shall be Mirafi, 500X or approved equal, and the backfill shall be placed and meet the specifications set forth in Division 2200 of the Specifications.

When a quantity of Subcut Road, Place Fabric & Granular Backfill is included in the estimate, the Engineer will determine the limits for subcutting, placing fabric and granular backfill. The Contractor shall subgrade the street prior to the Engineer making a final determination of the need to subcut.

2100.4 - EROSION CONTROL

2100.4.1 - General

This section contains the requirements necessary to control erosion and sedimentary run-off from the construction site activities. Other innovative practices or modification may be used if prior approval is given by the Engineer. The Contractor shall be responsible to maintain adequate erosion control. All erosion control measures shall be in place prior to beginning of construction.

2100.4.2 - Requirements

The Contractor shall be responsible to protect the construction site from soil eroding to other lands, streets, or into storm sewers. Erosion control measures shall include both temporary and permanent best management practices. The principles and procedures outlined in the "Wisconsin Construction Site - Best Management Practice Handbook", dated November 1993 or the most current revision, prepared by the Wisconsin Department of Natural Resources, shall be used for providing and installing erosion control measures. All storm sewer inlets shall not be placed in service unless protected with silt fence or an approved filter to prevent soil-laden storm run-off from entering the storm system, until the final surface has been placed. The Contractor shall be responsible to establish permanent vegetation on disturbed areas as soon as possible and to clean up vehicle soil tracking each day.

2100.5 - MEASUREMENT AND PAYMENT

2100.5.1 - Clearing and Grubbing

2100.5.1.1 - Inch Diameter

The quantity of clearing and grubbing shall be measured per inch diameter, approximately 4-1/2 feet above the existing ground level but above the ground swell, and the diameter of the tree shall be 1/3 of the measured circumference to the nearest full inch. Existing stumps which have not occurred as a result of the clearing operations of the Contractor shall be measured by taking the average diameter of the top of the stump. Only trees or stumps with a diameter of 3 inches or more shall be considered for payment. This shall be full compensation for the clearing and grubbing of the trees marked for removal by the Engineer; including the disposal of the wood and debris, labor, tools, equipment and incidentals necessary to complete the item of work in accordance with the requirements of the contract.

2100.5.1.2 - Lump Sum

The quantity of Clearing and Grubbing shall be measured for payment on the lump sum basis as shown on the plans and directed by the Engineer. This shall be full compensation for the clearing and grubbing of the area shown on the plans; including the disposal of the wood and debris, labor, tools, equipment and incidentals necessary to complete the item of work in accordance with the requirements of the contract.

2100.5.1.3 - Area

The quantity of Clearing and Grubbing shall be measured for payment by area in square yards, bounded by the line of trunks to be cut. This shall be full compensation for the clearing and grubbing of the area shown; including the disposal of the wood and debris, labor, tools, equipment and incidentals necessary to complete the item of work in accordance with the requirements of the contract.

2100.5.1.4 - Station

The quantity of clearing and grubbing shall be measured for payment by the 100-foot station, and shall include all trees within the designated width. This shall be full compensation for the clearing and grubbing 100-foot station shown on the plans or as directed by the Engineer; including the disposal of the wood and debris, labor, tools, equipment and incidentals necessary to complete the item of work in accordance with the requirements of the contract.

2100.5.2 - Remove Concrete Pavement

The quantity of Remove Concrete Pavement shall be measured for payment in area by square yards. This shall include all concrete pavement greater than four (4) inches in depth. The item of Remove Concrete Pavement shall be for removing and disposing of the concrete pavement, for furnishing all labor, tools, equipment and incidentals necessary to complete the item of work in accordance with the requirements of the contract.

2100.5.3 - Remove Concrete Curb and Gutter or Curb

The Quantity of Remove Concrete Curb and Gutter or curb shall be measured for payment in lineal feet. The item of Remove Concrete Curb and Gutter or Curb shall be for removing and disposing of the concrete curb and gutter or curb, for furnishing all labor, tools, equipment and incidentals necessary to complete the item of work in accordance with the requirements of the contract.

2100.5.4 - Remove Concrete Sidewalk

The quantity of Remove Concrete Sidewalk shall be measured for payment in area by square yards. It shall include all concrete sidewalk four (4) inches or less in depth. The item of Remove Concrete Sidewalk shall be for removing and disposing of the concrete sidewalk, for furnishing all labor, tools, equipment and incidentals necessary to complete the item of work in accordance with the requirements of the contract.

2100.5.5 - Scarify and Preparation of Aggregate Base Course

The quantity of scarify oil surface and preparation of aggregate base course shall be measured for payment in area by square yards. The item of Scarify and Preparation of Aggregate Base Course shall be for scarifying, grading, compaction, for furnishing all labor, tools, equipment and incidentals necessary to complete the item of work in accordance with the requirements of the contract.

2100.5.6 - Remove Bituminous/Oil Surface

The removal of bituminous/oil surfaces shall be measured and paid for per square yard removed from the site. No measurement or payment shall be made for aggregate or soil removed as part of the pavement removal process. The item of Remove Bituminous/Oil Surface shall be for removing and disposal of the existing bituminous/oiled surface; for furnishing all labor, tools, equipment and incidentals necessary to complete the item of work in accordance with the requirements of the contract.

2100.5.7 – Pulverize and Preparation of Base Course

Pulverize and Preparation of Base Course will be measured by the square yard of pulverized material according to the finished typical section width and details shown on the plans. Pulverize and Preparation of Base Course, as measured above, will be paid for at the contract unit price per square yard, which shall be full compensation for pulverizing of the existing asphalt pavement, adding water, compaction, preparation of the base course, and all labor, tools, equipment, and incidentals necessary to complete the work in accordance with the contract.

2100.5.8 – Pulverize, Transfer, and Preparation of Base Course

Pulverize, Transfer, and Preparation of Base Course will be measured by the square yard of pulverized and transferred material according to the finished typical section width and details shown on the plans. Pulverize, Transfer, and Preparation of Base Course, as measured

above, will be paid for at the contract unit price per square yard, which shall be full compensation for pulverizing of the existing asphalt pavement, windrowing, preparation of subbase, transferring of base course, adding water, compaction, preparation of the base course, and all labor, tools, equipment, and incidentals necessary to complete the work in accordance with the contract. Material removed from the project site as part of the preparation of the subbase shall be measured and paid for as unclassified excavation on the cubic yard basis.

2100.5.9 - Sawing

Sawing shall be measured and paid for at the contract unit price per lineal foot. This price shall be payment in full for all saw cuts and furnishing all labor, tools, equipment and incidentals necessary to complete the work.

2100.5.10 – Tree Protection Fencing

Erecting and maintaining of safety fence for tree protection shall be measured and paid for at the contract unit price for each tree protected on the per each basis. This price shall be payment in full for supplying, erecting, maintaining and removal of the safety fence and furnishing all labor, tools, equipment and incidentals necessary to complete the work.

2100.5.11 – Subcut Road, Place Fabric & Granular Backfill

The subcutting of the roadway two (2) feet below finished subgrade, and hauling and disposal of the material from the project site; supplying and placement of the filter fabric; and supplying, placement and compacting of the granular backfill; shall be measured and paid for as Subcut Road, Place Fabric, and Granular Backfill on the square yard basis, and shall be full compensation for all equipment, materials, hauling and disposal of excavated material, labor and incidentals necessary to complete the work. Preparation of the subbase and/or base course shall be included in the price bid for Subcut Road, Place Fabric, & Granular Backfill and no additional compensation shall be made for this work.

THIS PAGE INTENTIONALLY LEFT BLANK

CITY OF ALTOONA

S P E C I F I C A T I O N S

DIVISION 2200 - EXCAVATION AND EMBANKMENT

2200.1 - DESCRIPTION

2200.1.1 - General

Work in this section shall consist of constructing roadway and site excavations and embankments including grading for roadside areas together with excavation and backfilling necessary to prepare foundations in areas shown on the plans and as provided by these specifications.

All work in this division of the specifications shall conform to the requirements of Sections 205 through 214, inclusive of the WSSHSC except as modified herein.

2200.2 - MATERIALS

2200.2.1 - General

Excavation shall be classified as Common Excavation, Rock Excavation, Marsh Excavation or Unclassified Excavation as hereinafter described. All materials must be stored, stockpiled or salvaged with a minimum of inconvenience to the public, adjacent owners, tenants or other contractors.

Excavation below subgrade for subgrade stabilization and removal of silt or other soils undesirable for roadbed construction shall be classified as Common Excavation or Unclassified Excavation.

2200.2.2 - Common Excavation

Common Excavation shall consist of the removal and satisfactory disposal of all existing materials not classified under one of the other categories included herein. Common Excavation shall include excavations for subgrade corrections when a separate item is not included in the Proposal. The Contractor shall transfer the areas of cut material to areas that require fill to balance the cuts and fills. All fill areas shall be compacted in accordance to Section 2200.3.3.

2200.2.3 - Rock Excavation

Rock Excavation shall consist of all materials that cannot, in the Engineer's opinion, be excavated without drilling and blasting or without the use of rippers, together with boulders and other detached rock having a volume of one (1) cubic yard or more.

2200.2.4 - Marsh Excavation

Marsh Excavation shall consist of all required excavation below the original ground level of marshes, swamps and saturated mixtures of soil and organic matter underlying proposed embankments, within the limits indicated on the plans or as determined by the Engineer, and necessary to insure a stable foundation for the roadbed.

2200.2.5 - Unclassified Excavation

Unclassified Excavation shall include any and all materials encountered in the performance of the work other than those specific materials in the foregoing classifications of Common Excavation, Rock Excavation or Marsh Excavation.

2200.2.6 - Granular Backfill

Granular backfill shall consist of furnishing and backfilling with processed or selected materials, the excavations for frost-heave or other unsuitable materials, the backfilling of trenches, and other locations called for on the plans or when required by the Engineer.

Granular material for backfilling shall consist of durable particles ranging from fine to coarse in a substantially uniform combination. Granular backfill shall conform to the following gradation requirements.

GRANULAR BACKFILL	
Sieve Size	**Percent Passing By Weight**
2 Inch	95-100%
No. 4	35-60
Finer than No. 200	5-15

2200.2.7 - Borrow Excavation

Borrow Excavation shall consist of furnishing, excavating, hauling and placing approved material for the completion of embankments and other portions of the work when sufficient quantities of satisfactory material cannot be obtained from within the project limits. Borrow material must be obtained from approved locations and sources provided by the Contractor or from the City as outlined in the special provisions.

Materials for borrow and construction of embankments shall consist of approved materials and shall contain no logs, stumps, brush or other perishable material. Materials to be incorporated in the top one (1) foot of the earth embankments shall be free from large stone, rock, broken concrete or other materials which would significantly affect the finishing of the subgrade.

2200.3 - CONSTRUCTION METHODS

2200.3.1 - General

Before placing of embankment materials, all required clearing and grubbing of the site shall be completed in accordance with Division 2100.

All excavations and embankments shall be maintained in a well drained condition at all times. This shall include the installation of planned drainage facilities concurrently with the embankment construction or the installation of temporary drainage facilities as directed by the Engineer. No material shall be stockpiled in such a manner that will restrict surface drainage.

All excavations shall be made in reasonably close conformity with the lines, grades and slopes staked by the Engineer and as he may otherwise direct. Roadways and sites shall be graded to permit the placing of the proper thickness of aggregate base, surface courses and landscape materials. The Contractor shall furnish all equipment and labor required for the work including satisfactory disposal of waste material.

2200.3.2 - Placing Embankments

The construction of fill sections and embankments shall be in strict accordance with WSSHSC Section 207.3.2.

2200.3.3 - Compaction

All embankments under roadways shall be compacted to 95% of modified proctor density. All embankment material placed within the limits of assumed one-to-one slopes extending outward and downward from the outer limits of the finished shoulder or back of curb

line or under driveways and sidewalks shall meet the minimum specified density requirement. Embankments placed outside such areas shall be compacted in accordance with the Standard Compaction Method as outlined in WSSHSC Section 207.3.6.2.

2200.3.4 - Moisture Content

Embankment material shall not be compacted when the moisture content is such to cause excessive rutting, displacement or distortion under compacting equipment. When these conditions exist, the material shall be allowed to dry.

When the embankment material does not contain sufficient moisture to compact properly, water shall be added in quantities deemed necessary to aid and accelerate, and to secure the required compaction.

2200.3.5 - Compaction

The foundations for aggregate base course, concrete or bituminous paving shall be constructed with a uniform density throughout, and shall be smooth with proper elevation and contour for the next course to be constructed. Areas of unstable materials shall be excavated and backfilled as directed by the Engineer.

Foundations under surfaced areas whether concrete or bituminous shall be compacted to a minimum 95% modified proctor density.

2200.3.6 - Backfilling of Concrete Work

The Contractor shall be responsible to grade for the placement of concrete, to backfill and as required for all restoration work. On projects where concrete curb and gutter is constructed the Contractor shall be required to shape and backfill behind the curb within six (6) inches of the top of the curb with clean fill material with a maximum gradation of one (1) inch. This fill material may be taken from the street being worked on when approved by the Engineer. If in the estimation of the Engineer, there is insufficient material located on the job site, borrow material meeting the requirements for Borrow Excavation shall to hauled to the site and placed by the Contractor. Where sidewalk and curb and gutter is constructed, the boulevard area and the area behind the sidewalk shall be graded to six (6) inches below finished grade.

2200.3.7 - Dust Abatement

The Contractor shall minimize the dispersion of dust from the subgrade during grading operations until acceptance of the work. The application of water or other approved dust control materials is considered part of the Contractor's responsibility or as required by the

Engineer. The cost of dust abatement shall be considered incidental to the item of subgrade preparation.

2200.3.8 – Subcut Road, Place Fabric & Granular Backfill

In locations, as determined by the Engineer, where the subgrade is too wet or unstable to place crushed aggregate base course, the Contractor shall subcut these locations two (2) feet below the proposed subgrade, place filter fabric, and granular backfill. The filter fabric shall be mirafi, 500X or approved equal, and the backfill shall be placed and meet the specifications set forth in Division 2200 of the Specifications.

When a quantity of Subcut Road, Place Fabric & Granular Backfill is included in the estimate, the Engineer will determine the limits for subcutting, placing fabric and granular backfill. The Contractor shall subgrade the street prior to the Engineer making a final determination of the need to subcut.

2200.4 - MEASUREMENT AND PAYMENT

2200.4.1 - Load Tickets

The Contractor shall furnish and deliver a printed scale ticket showing net weight of the load or showing size of load in cubic yards, date, time, description of material, source of material, destination of material, and driver name. To be considered for payment, the tickets shall be delivered to the City's representative no later than 12:00 (noon) of the first working day following material delivery.

2200.4.2 - Common Excavation

Common excavation, when included in the Proposal, shall be measured by volume of the material in its original position. Volumes shall be computed by average end area method, as determined from original and final cross-sections. Excavations for the correction of subgrade shall be measured and paid for on a cubic yard basis for the volume of material removed from the site. Where the cross-section method is not practical, at the determination of the Engineer, the measurement may be made by the cubic yard in the vehicle. The capacity of each vehicle used for hauling the material shall be determined by the Engineer to the nearest 1/10 cubic yard.

The transferring of material from one end of a project to another for the purpose of balancing the cuts and fills shall be considered incidental to the item of common excavation.

2200.4.3 - Rock Excavation

Rock excavation shall be measured and paid for in accordance with WSSHSC Section 205.5.1. by the cubic yard. If the Proposal fails to include a bid item for Rock Excavation and material is uncovered that is so classified, excavation of the rock shall be paid separately at the Contract unit price for Unclassified Excavation plus $8.00 additional per cubic yard.

2200.4.4 - Marsh Excavation

Marsh Excavation shall be measured and paid for in accordance with WSSHSC Section 205.5.1 by the cubic yard.

2200.4.5 - Unclassified Excavation

The majority of excavation on City street projects shall be measured and paid for as Unclassified Excavation. The Contractor shall be paid for all excavation which is deemed as waste material and is hauled from the job site. Only excavation which is hauled from the job site shall be measured and paid for as unclassified excavation.

Excavation materials which are suitable to be used as granular backfill shall be transferred to fill areas within the construction limits as needed to balance the cut and fill of the subgrade. To be measured as a pay item the material must be loaded in a vehicle for which the capacity can be determined by the Engineer and the material must be removed from the project site. The movement of material for the balance of cuts and fills shall be included in the item for Preparation of Subbase.

2200.4.6 - Borrow Excavation

Borrow materials shall be measured and paid by volume in cubic yards. No separate compensation shall be made for any incidental pit stripping, waste excavation, clearing, grubbing, topsoil replacement, pit shaping, seeding or other expenses incurred in supplying borrow material from the Contractor selected source.

The basis of measure shall be indicated in the Proposal as being one of the following: Excavated Volume (EV) or Loose Volume (LV).

2200.4.6.1 - Excavated Volume

Excavated Volume (EV) shall be determined by cross section measure of the material in its original position at the source of supply.

2200.4.6.2 - Loose Volume

Loose Volume (LV) shall be determined by one (1) of the following two (2) methods:

(1) Cross sectional volume, when provided in the plan set, shall be used to determine the volume of material delivered to the project site. Truck load count will not be permitted. The volume of borrow material shall be the plan quantity in place with no allowance for compaction.

(2) Vehicular measure shall be used when cross sections are not provided in the plan set. The quantity of borrow excavation shall be in place volume. The volume of borrow material by vehicular measure shall be the truck load volume multiplied by 70 percent to allow for compaction (Vehicular Volume x 0.70 = Pay Volume for Borrow).

2200.4.7 - Granular Backfill

Granular Backfill shall be measured and paid for by vehicular measure Loose Volume (LV) delivered to the site and incorporated in the project. Loose Volume (LV) shall be determined by one (1) of the following two (2) methods:

(1) Cross sectional volume, when provided in the plan set, shall be used to determine the volume of material delivered to the project site. Truck load count will not be permitted. The volume of borrow material shall be the plan quantity in place with no allowance for compaction.

(2) Vehicular measure shall be used when cross sections are not provided in the plan set. The quantity of borrow excavation shall be in place volume. The volume of borrow material by vehicular measure shall be the truck load volume multiplied by 70 percent to allow for compaction (Vehicular Volume x 0.70 = Pay Volume for Borrow).

2200.4.8 - Preparation of Subbase

Preparation of subbase shall be measured and paid for by the square yard only on streets having no aggregate base course or having had the existing base course removed. Preparation of Subbase shall also include the movement of backfill material within the construction limits as needed to balance the cut and fill of the subgrade. Measurement for payment for preparation of subbase shall be the proposed width of the face-to-face curb and gutter plus two (2) foot multiplied by the length of street. Payment at the contract unit price per square yard shall be full compensation for shaping and compacting the subbase.

2200.4.9 - Water

Water incorporated and used in the excavation, embankment, subbase preparation and dust control will not be measured and shall be considered incidental to the construction operations.

2200.4.10 – Subcut Road, Place Fabric & Granular Backfill

The subcutting of the roadway two (2) feet below finished subgrade, and hauling and disposal of the material from the project site; supplying and placement of the filter fabric; and supplying, placement and compacting of the granular backfill; shall be measured and paid for as Subcut Road, Place Fabric, and Granular Backfill on the square yard basis, and shall be full compensation for all equipment, materials, hauling and disposal of excavated material, labor and incidentals necessary to complete the work. Preparation of the subbase and/or base course shall be included in the price bid for Subcut Road, Place Fabric, & Granular Backfill and no additional compensation shall be made for this work.

CITY OF ALTOONA

S P E C I F I C A T I O N S

DIVISION 2230 - AGGREGATE BASE

2230.1 - DESCRIPTION

2230.1.1 - General

Work in this section shall consist of the furnishing, hauling, spreading, shaping, etc., a dense, compacted base course composed of aggregate of the required gradation and stability in accordance with the Plans and Details.

All work in this division of the specifications shall conform to the requirements of Sections 301, 305 and 306, inclusive of the WSSHSC except as modified herein.

2230.2 - MATERIALS

2230.2.1 - General

All materials must be stored with a minimum of inconvenience to the public, adjacent owners or tenants, or to other contractors. The Contractor shall be responsible for obtaining the source of all aggregates for the construction.

2230.2.2 - Crushed Aggregate Base Course

The aggregates shall consist of hard, durable particles of crushed stone or crushed gravel and a filler of natural sand, stone sand or other finely divided mineral matter. Oversize material encountered shall be removed by screening or shall be crushed to the required sizes. The composite material shall be substantially free from organic matter, shale and lumps or balls of clay, and shall be uniformly graded from course to fine as evidenced by a concave grain-size distribution curve, and shall meet the following gradation requirements:

SIEVE SIZE	PERCENT PASSING
1"	100
3/8"	65-85
#4	45-65
#10	25-45
#40	15-30
#200	5-12

At least 60 percent, by count, of the number of particles of aggregate retained on the No. 4 sieve shall have at least one fractured face.

2230.2.3 - Recycle Base Course

Recycled base course may be used in place of virgin crushed aggregate base course provided it meets the requirements of the virgin materials. Oversize material encountered shall be removed by screening or shall be crushed to the required sizes. The composite material shall be substantially free from organic matter, shale and lumps or balls of clay, and shall be uniformly graded from course to fine as evidenced by a concave grain-size distribution curve, and shall meet the following gradation requirements:

SIEVE SIZE	PERCENT PASSING
1"	100
3/8"	65-85
#4	45-65
#10	25-50
#40	15-30
#200	5-12

No extra compensation shall be given for supplying recycled base course. The Engineer reserves the right to discontinue the use of recycled base course at any time.

2230.3. - METHODS

2230.3.1 - Aggregate/Recycled Base Course

2230.3.1.1 - General

In order to accommodate local traffic as early as possible, the Contractor shall place aggregate base as soon as possible following the subgrade preparation, and prior to constructing the curb and gutter as directed by the Engineer. The Contractor shall construct the base to the proper width, depth, dimension, and shape as shown on the Plans and Details.

On streets with an existing aggregate base, the Contractor shall be responsible to reshape, transfer, or reuse as much of the existing suitable base course material as possible. Contaminated base course shall be hauled away as unclassified excavation.

2230.3.1.2 - Weight Tickets

The Contractor shall furnish and deliver a printed scale ticket showing net weight of the load, description of material, and all information shown on load ticket example, available upon request. The tickets shall be delivered to the City's Project Representative no later than 12:00 (noon) of the first working day following material delivery.

2230.3.1.3 - Placement

The material shall be deposited on the foundation in a manner to minimize segregation, and to facilitate spreading in a uniform layer of the required dimensions. Excessive manipulation or mixing which will cause segregation between the coarse and fine materials shall be avoided. If segregation has occurred due to improper grading techniques, the contractor shall remove and replace the segregated aggregate base course at the contractor's expense with no additional compensation made for the removal and replacement. A water truck must be available on the project site in order to reach optimum moisture and to prevent aggregate separation. If segregation is occurring due to low water content, the Engineer shall order all grading operations to stop until a water truck is provided. No additional compensation shall be made for providing a water truck or any delays the stopping of the grading may have caused.

2230.3.1.4 - Compaction

After a layer or course has been placed and spread to the required thickness, width and contour, it shall be compacted. In the event the material is deficient in moisture content for readily attaining the required density, it shall be moistened to the degree necessary during compaction operations by means of approved equipment.

Unless otherwise required in the contract, each layer shall be compacted to 95% of the maximum density, which achieves consolidation of the material to the degree that there shall be no appreciable displacement of it laterally or longitudinally under the compacting equipment.

2230.3.1.5 - Testing

2230.3.1.5.1 - Optimum Moisture

Determination of optimum moisture content and maximum density will be in accordance with the Standard Method of Test for the Moisture-Density Relations of Soils. ASHTO Designation: T99, Method C, with replacement of the fraction of the aggregate retained on the 3/4-inch sieve with No. 4 to 3/4-inch material.

2230.3.1.5.2 - Density

Field determination of the density in the completed base course shall be in accordance with the modified method of test for density of soil-in-place by the sand cone method AASHTO Designation T191 or by approved nuclear density testing methods.

All areas where proper compaction is not obtainable, due to segregation of materials, excess fines or other deficiencies in the aggregate, shall be reworked as necessary or the deficient material removed and replaced with material that will yield the required results.

2230.3.1.6 - Damage to Adjoining Structures

The Contractor shall use extreme care during placing, shaping, and compacting of the aggregate base course to prevent damage to abutting curb and gutter, concrete pavement, or concrete sidewalk. All sections, in the opinion of the Engineer, damaged by the Contractor shall be replaced by the Contractor at no expense to the City.

2230.3.1.7 - Finished Grading on Street to be Oiled

In areas of construction where no finished surface is required to be placed under this contract, such as streets to be oiled by the City, the Contractor shall shape a six-inch windrow curb from the aggregate base course material, as shown on the Plans and Details. The material for the curb shall be considered part of the plan quantity and shall be considered incidental to the cost of aggregate base course.

2230.3.1.8 - Shoulders

In areas of construction where a finished surface is placed with no curb and gutter, the Contractor shall construct aggregate base course shoulders as shown on the Plans and Details. The work shall be prosecuted in the proper sequence with the surfacing operations, and the equipment used in shoulder operations shall be adequate in design and capacity to achieve the required results.

2230.3.1.9 - Dust Abatement

The Contractor shall minimize the dispersion of dust from the base course, including shoulders, during construction with the application of water or other approved dust control materials. After being notified by the Engineer of a dust control problem, the Contractor shall respond on the same day with dust abatement. There will be no compensation for dust abatement and the cost of dust abatement shall be included in the base course item.

2230.3.2 - Transfer Existing Aggregate Base Course

On streets having existing crushed aggregate base course which is acceptable for salvage and reuse on the street under construction, the Contractor shall move or transfer the crushed aggregate base course to permit excavation of underlying materials and preparation of subbase. The work requires moving the crushed aggregate base from side to side or from end to end of the street.

2230.4 - MEASUREMENT AND PAYMENT

2230.4.1 - Aggregate Base Course

2230.4.1.1 - Ton Method

Crushed aggregate base shall be paid for at the contract unit price per ton for streets with existing aggregate base which is to be supplemented with additional new base course, and shall be full compensation for furnishing, hauling, spreading, and compacting the crushed aggregate base course material. The Contractor shall furnish mechanically produced weight tickets which shall be converted to tons.

2230.4.1.2 - Cubic Yard Method

Crushed aggregate base course shall be paid for on the plan quantity basis per cubic yard for new and reconstructed streets having the existing surfaces removed and/or requiring a new aggregate base as shown on the Plans and Details.

The final quantity shall be based on the plan width and measured length of the placed aggregate multiplied by the plan depth and a 30% expansion factor (cubic yards = length x width x depth x 1.3). The plan width shall be the face-to-face curb and gutter dimension plus one (1) foot. This shall be full compensation for furnishing, spreading, shaping, preparing, and compacting the aggregate base course material.

2230.4.1.3 - Shouldering

Materials for shouldering shall be measured and paid for using the cubic yard method for Crushed Aggregate Base Course.

The final quantity shall be based on the plan width and pavement thickness, and the measured length of the constructed street, plus a 30% expansion factor (cubic yards = length x width x depth x 1.3). This shall be considered full compensation for furnishing, spreading, shaping, and compacting the crushed aggregate shoulder material.

2230.4.2 - Preparation of Aggregate Base

Preparation of aggregate base shall be paid by the square yard **only** for streets having existing base course which is to be supplemented with additional new base course, and paid for by the ton method, and shall be full compensation for shaping and compacting the aggregate base. Measurement for payment for preparation of aggregate base shall be the proposed width of the face-to-face curb and gutter minus four (4) foot multiplied by the length of street.

Preparation of aggregate base for streets using the cubic yard method shall be considered incidental to the cost of the aggregate base course. The Contractor shall be compensated for preparation of the subbase on these streets.

2230.4.3 - Transfer Existing Aggregate Base Course

Transfer Existing Aggregate Base Course shall be paid by the cubic yard based on the plan width and measured length of the placed aggregate multiplied by the plan depth and a 30% expansion factor (cubic yards = length x width x depth x 1.3). This shall be full compensation for removal, transferring, spreading, shaping, preparing, and compacting the aggregate base course materials.

The Contractor shall be compensated for preparation of the subbase on the streets where the existing aggregate base course is transferred. No compensation shall be made for the preparation of the aggregate base course on the streets where the existing aggregate base course is transferred.

2230.5 – DETAILS

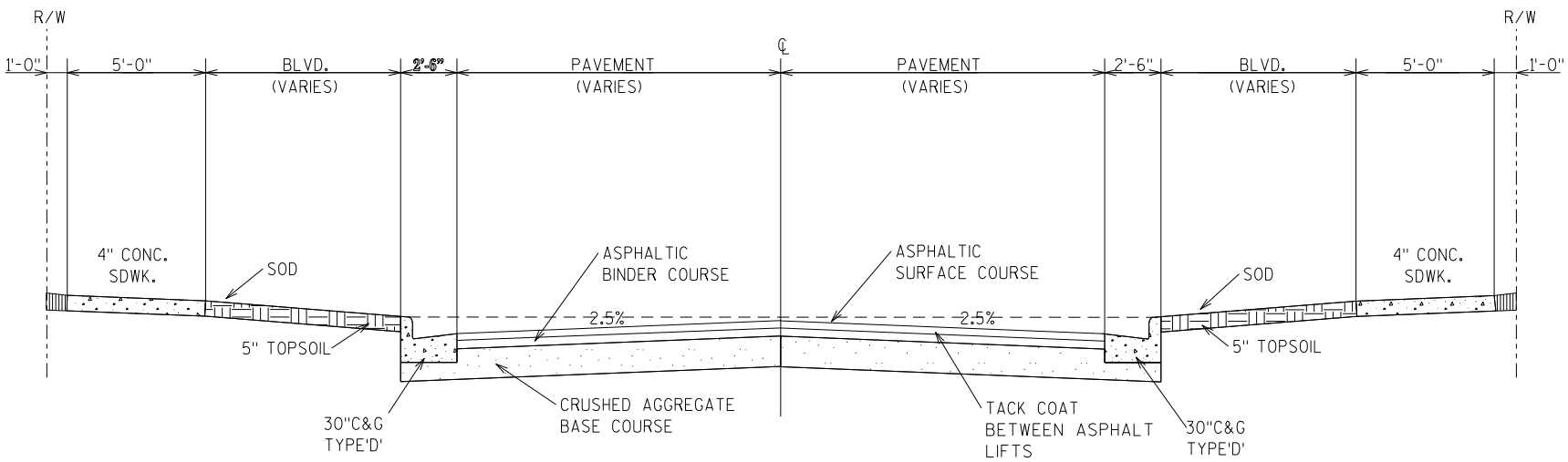

TYPE "P" GRADING
(PAVED STREET)

NOTE: A TYPICAL STREET SHALL BE PAVED IN (2) PASSES UNLESS OTHERWISE APPROVED BY THE ENGINEER.

GRADING DETAIL

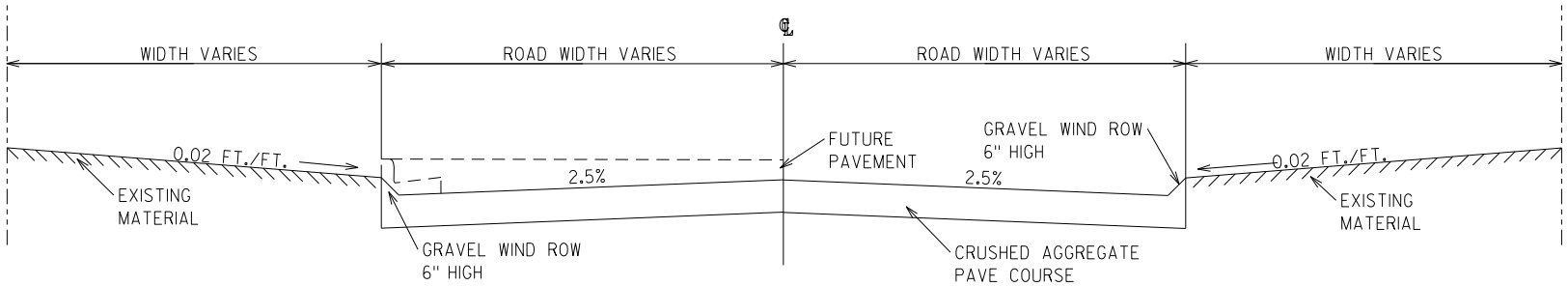

TYPE "O" GRADING
(OILED STREET)

City of Alhambra PUBLIC WORKS

2230 - Page 7 of 8

2230.1

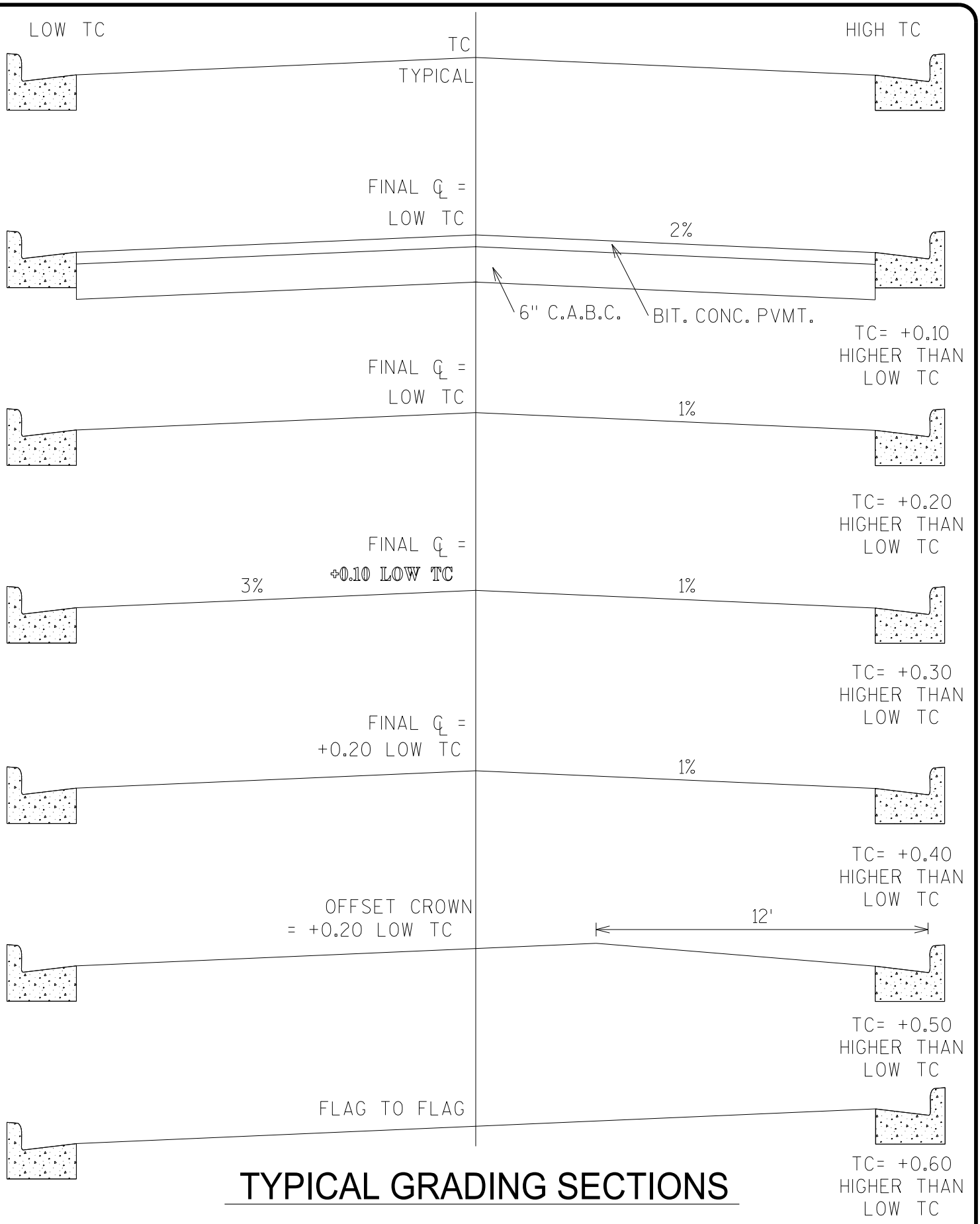

TYPICAL GRADING SECTIONS

CITY OF ALTOONA

S P E C I F I C A T I O N S

DIVISION 2270 - BANK STABILIZATION

2270.1 - DESCRIPTION

2270.1.1 - General

Work in this division shall consist of furnishing and placing aggregate bedding and loose rock riprap for stabilization of the river bank in areas shown on the plans and as provided by these specifications.

2270.2 - MATERIALS

2270.2.1 - Submittals

2270.2.1.1 - Riprap

The Contractor shall notify the Engineer in writing of sources of riprap. Access shall be provided to sources to enable Engineer to inspect and obtain samples. No riprap shall be delivered to the project site until approved.

2270.2.1.2 - Bedding Material

The Contractor shall submit a grain size analysis of bedding material for approval. No bedding material shall be delivered to the project site until approved.

2270.2.3 - Storing and Handling

The storing and handle riprap and bedding aggregates shall be by methods that prevent segregation of particle sizes or contamination by mixing with other materials.

2270.2.4 - Riprap

Riprap shall be individual rock and rock fragments of field or quarry stone that are dense, sound, durable, free of defects conducive to weathering, and angular to subangular in shape. Least dimension of individual pieces shall be not less than one-third of greatest dimension. Bulk specific gravity shall be 2.5 or greater. Gradation shall range in weight according to the following:

RIPRAP NO. 1

Stone Wt. (Lbs.)	% Passing by Weight
170	100
65	50 - 100
30	15 - 50
25	0 - 40
11	0 - 15

RIPRAP NO. 2

Stone Wt. (Lbs.)	% Passing by Weight
1650	100
650	62 - 100
400	40 - 60
200	0 - 34
100	0 - 15

2270.2.5 - Bedding

Bedding shall be clean, hard gravel or crushed stone, free of organic matter and clay balls, well graded according to the following:

Size	% Passing by Weight
6"	100
4"	85 - 100
2"	67 - 100
1-1/2"	60 - 100
3/4"	35 - 72
1/2"	10 - 60
#4	0 - 20
#6	0 - 5

2270.3 - CONSTRUCTION METHODS

2270.3.1 - Excavation and Embankment

Excavation and embankment work to prepare riprap/bedding subgrade shall be in accordance with the pertinent requirements of Division 2200. The subgrade shall be graded to the lines and grades as shown on the Plans and Details with an allowance for riprap and bedding. The Contractor shall remove all organic materials and compact soft subgrade soils. When fill to achieve subgrade lines is required, the Contractor shall provide granular bedding or other approved materials.

The Contractor shall prepare the below-water subgrade, and place bedding and riprap in such a manner so as to prevent instability of above-water slopes.

2270.3.2 - Aggregate Bedding

Where indicated on the plans, the Contractor shall place aggregate bedding to receive riprap and spread the material uniformly on the prepared subgrade to depth specified. Unless otherwise noted, compaction of aggregate bedding layers is not required but the surface shall be finished reasonably free of mounds, dips and windrows.

2270.3.3 - Placing Riprap

The riprap shall be placed to full course thickness in one operation from base of slope upward. Riprap shall be reasonably homogeneous with larger rocks uniformly distributed and firmly in contact and smaller rocks and spalls rammed into voids between larger rocks to interlock and form a tight, even surface.

Hand placement shall be required where necessary to correct obvious irregularities and to prevent damage to adjacent improvements and wherever equipment placement methods are unsatisfactory. Riprap shall not be placed against or in contact with any concrete masonry surface prior to expiration of the concrete curing and protection period.

2270.4 - MEASUREMENT AND PAYMENT

2270.4.1 - Bank Stabilization

Bank stabilization shall be measured by the 100-foot station along the roadway centerline or reference line, recorded to the nearest 0.1 station.

Bank stabilization shall be paid for at the contract unit price per station, which price shall be full compensation for all excavation and embankment work within the limits shown for riprap work; for furnishing and placing aggregate bedding and riprap; and for furnishing all equipment, tools, labor, and incidentals necessary to complete the work.

CITY OF ALTOONA

S P E C I F I C A T I O N S

DIVISION 2300 - JACKING AND BORING

2300.1 - DESCRIPTION

2300.1.1 - General

When jacking or boring operations are required or permitted, the pipe shall be jacked or bored at such locations and under specific conditions approved or stipulated by the Engineer. The Contractor shall submit for review details giving the limits of the proposed jacking, the method and equipment to be used, and the location of the shaft, pit or approach tunnel. This shaft, pit or approach tunnel shall be at a location that will not unduly interfere with traffic or with the use of adjacent property.

All work in this section shall conform to the requirements of Division 2600 and 2700.

2300.2 - MATERIALS

2300.2.1 - General

All materials furnished by the Contractor shall conform to the requirements of this section. All materials delivered to the job site for use in the construction of jacked or bored casing pipe must pass a field inspection before installation. The Contractor shall allow the Engineer adequate time for the inspection of materials. All materials found to be defective shall be rejected by the Engineer and shall be removed from the site immediately. No compensation will be paid for delays caused by the inspection, whether or not the materials are accepted.

All jacking or boring pipe materials, if delivered to the job site prior to construction, shall be stored in an approved storage area, and shall be kept safe from damage. All pipe and accessories shall be handled with care in order to avoid damage. Under no circumstances shall such materials be dropped or skidded along other pipe.

2300.2.2 - Pipe Materials

2300.2.2.1 - Casing Pipe

2300.2.2.1.1 - Reinforced Concrete Pipe

Reinforced concrete pipe shall meet the requirements of Section 2700.2.8.2 - Reinforced Concrete Pipe, and shall have two circular rings of reinforcement extending into both the tongue and groove of the pipe. The use of quadrant reinforcement or elliptical reinforcement, as an alternate to full inner and outer circular cages, will not be permitted in pipe intended for jacking.

2300.2.2.1.2 - Steel Pipe

Steel pipe shall meet the requirements as set forth in the Contract Documents. The joints of sections of casing pipe to be jacked shall be welded with a continuous circumferential weld. It shall be the Contractor's responsibility to provide stress transfer across the joints which is capable of resisting the jacking forces involved.

2300.2.2.2 - Carrier Pipe

2300.2.2.2.1 - Sanitary Sewer

The sanitary sewer pipe shall be a polyvinyl chloride (PVC) pipe conforming to the requirements of Section 2700.2.8.1 or ductile iron pipe conforming to the requirements of section 2700.2.8.3. The sewer pipe shall be supported and braced to prevent shifting or flotation during the backfilling operation. The annular space between the sewer pipe and the casing pipe shall be filled with sand or styrofoam beads.

2300.2.2.2.2 - Water Main

The water main pipe shall be ductile iron positive restrained joint pipe in accordance to the requirements of Division 2600. The water main shall be supported and braced to prevent shifting or flotation during the backfilling operation. The annular space between the sewer pipe and the casing pipe shall be filled with sand or styrofoam beads.

2300.2.3 - Backfill and Cellular Concrete.

2300.2.3.1 - Backfill Concrete.

This class of concrete is for backfill for sewer constructed in tunnels, and where concrete backfill is specified. When site mixing is used, it may be proportioned either one and one-half bags of Portland Cement, 6 cubic feet of concrete sand and 12 cubic feet of coarse aggregate or one bag of Portland Cement and 12 cubic feet of graded aggregate.

2300.2.3.2 - Cellular Concrete.

Lightweight cellular concrete may be used for filling abandoned sewers, as a grouting mixture for filling voids, and as a substitute for backfill concrete in tunnels. The cellular concrete shall be produced by blending preformed foam with cement-sand grout slurry to produce a concrete having a fresh weight per cubic foot of not less than 75 pounds. The cement-sand grout slurry shall be proportioned to contain 8 bags of Type 1 or IA Portland Cement per cubic yard.

CONCRETE CLASSIFICATION				
Class of Concrete	**Minimum Bags of Cement Per Cubic Yard**	**Type of Cement Required**	**Size of Coarse Aggregate Required**	**Use***
Backfill Concrete**	2.25	I, IS, IA or ISA	No. 1	Backfill for pipe sewers constructed in tunnel and fill under channel paving, for piers under existing utilities.
Cellular Concrete	8.0***	I or IA	None	Backfill for pipe sewers constructed in tunnel, abandoning sewers and grouting mixture.

**** Alternate proportions for site-mixed concrete backfill may be permitted as described in Section 2300.2.3.1**

***** The cement-sand slurry portion of cellular concrete shall be proportioned to contain 8 sacks of cement per cubic yard of slurry as specified in Section 2300.2.3.2**

2300.3 - METHODS

2300.3.1 - General

Pipe jacking or boring and the installation of the carrier pipe into the casing pipe shall conform to the requirements of this document. The location of the pipe casing to be jacked or bored shall be as shown on the Plans or as directed by the Engineer.

2300.3.2 - Cushioning of Barrel and Joints

The barrel and joints of all jacked pipe shall be protected from crushing or other damage, by placing "Celotex", plywood or other approved cushioning material on the outside shoulder of the spigot end of each section of pipe prior to jacking out of the shaft. The cushioning material shall be secured in position in a mastic material or other approved means. Jacking pressures used shall be such that crushing or other damage to the barrel or joints of the pipe will not occur.

2300.3.3 - Mortaring of Joints

After the casing pipe is in its final position, the joints shall be painted with a non-shrink cement mortar. This painting is not required when rubber-type gasket joints are used.

2300.3.4 - Grouting of Voids

Upon completion of the jacking operations, all voids around the outside face of the pipe shall be filled with backfill concrete or cellular concrete. Except as may be approved by the Engineer, bentonite (dry or slurry form) or any other lubricant, shall not be used in lieu of required grouting to fill voids between the exterior of the pipe and the tunnel excavation or the primary earth support system.

2300.3.5 - Placing Carrier Pipes into Casings

Unless otherwise required, water main installed in casing pipe shall have the rubber gasket joint located 2 feet outside the ends of the casing pipe. A sand cushion shall be placed in the boring before pushing the pipe. The boring shall be backfilled by pumping or blowing in sand.

All pipe installed in bored or cased holes shall be provided, if directed by the Engineer, with a minimum of two separate wraps of polyethylene. Care shall be exercised that mud or dissimilar materials that would cause corrosion of the pipe shall not come in contact with the pipe. No additional compensation shall be made for polyethylene wrap.

2300.3.6 - Boring Water Main Without Casing Pipe

Unless otherwise specified, boring without a casing pipe shall be limited to a maximum 16 feet in length with no water pipe joint permitted within the bore.

2300.3.7 - Encasement of Mains and Bulkheading

The Contractor shall blow or pump in polystyrene insulation beads or sand into the annular space between the sewer pipe or water main and the casing pipe. The ends of the casing shall then be bulkheaded with 12 inches of concrete or brick. The placement of the water main or sewer pipe, blowing in the polystyrene beads or sand, and the bulkheading of the casing shall be included in the price bid for water main or sanitary sewer.

2300.3.8 - Verification of Line and Grade

Prior to backfilling the jacking/boring pit or the casing trench, the Contractor shall notify the City to permit verification of line and grade of the newly installed casing pipe. The Contractor shall expose the terminal end of a jacked/bored casing pipe to permit verification of line and grade. Any unacceptable deviations from the specified line and grade (greater than three (3) inches) shall be corrected by the Contractor at no expense to the owner. No additional compensation shall be made for work required for verification of line and grade.

2300.3.9 - Temporary Concrete Parapets Along Roadway

The Contractor shall place parapets along existing roadways a minimum of 150 feet, or as directed by the Engineer, when excavating for work associated with casing pipe installation or line and grade verification. The ends of the parapet line shall be tapered away from the roadway. The parapets shall remain in place until the work area has been backfilled and restoration completed. The cost for supplying, installing, maintaining, and the removal of the parapets shall be included in the price bid for casing pipe, water main, or sanitary sewer. No additional compensation shall be made for the parapets.

2300.4 - MEASUREMENT AND PAYMENT

2300.4.1 - Casing Pipe Jacked or Bored

The quantity of Casing Pipe Jacked or Bored shall be paid for per lineal foot according to the diameter as measured along the centerline of the pipe. This shall be full compensation for excavation, furnishing, installing, jacking or boring, backfilling, bulkheading, encasing, compacting, labor and incidentals necessary to complete the work.

2300.4.2 - Casing Pipe Open Cut

The quantity of Casing Pipe Open Cut shall be paid for per lineal foot according to the diameter as measured along the centerline of the pipe. This shall be full compensation for excavation, furnishing, installing, backfilling, bulkheading, encasing, compacting, labor and incidentals to complete the work.

2300.4.3 - Sanitary Sewer and Water Main

Sanitary Sewer and Water Main installed in the casing shall be paid for separately, and in accordance with the specifications. The placement of the water main or sewer pipe, blowing in the polystyrene beads or sand, and the bulkheading of the casing shall be included in the price bid for water main or sanitary sewer.

2300.5 - DETAILS

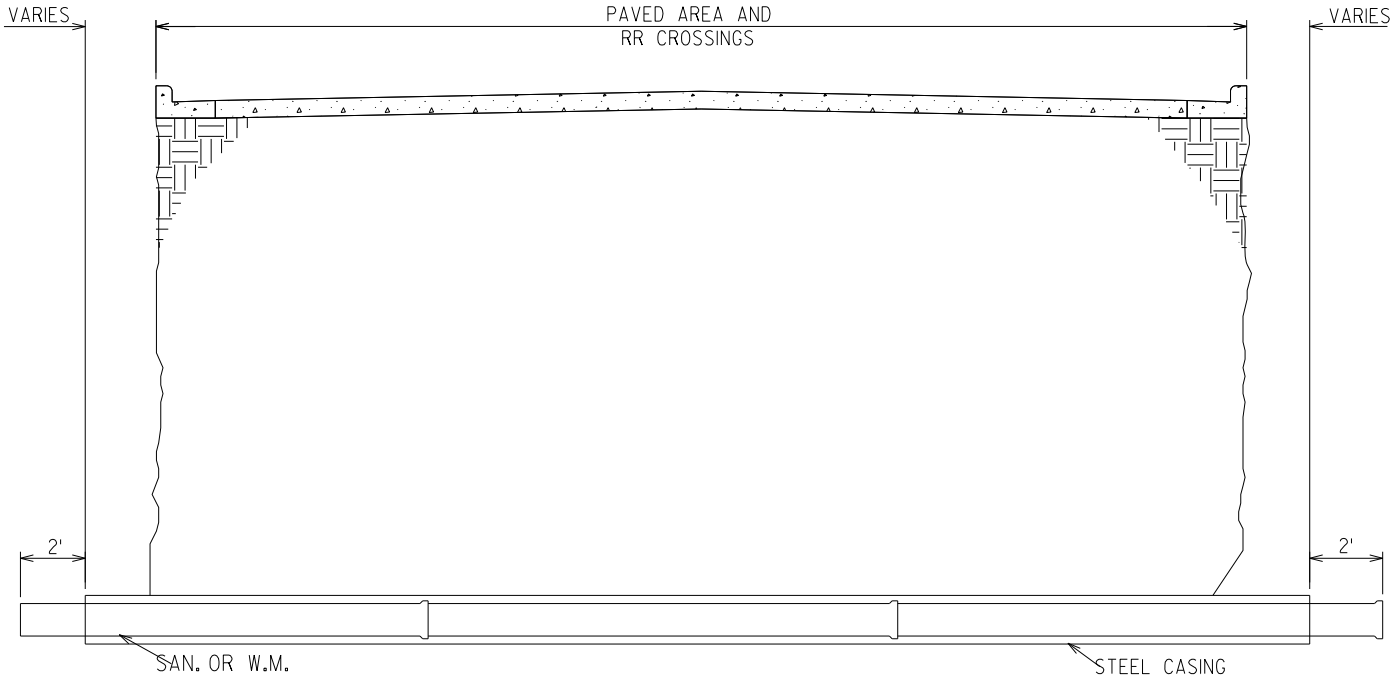

STEEL CASING PIPE ASTM A-53 GRADE B 35,000 PSI. MIN. YIELD			
SIZE PIPE	CASING MIN. WALL	CASING MIN. DIA.	NOTE
6"	0.312	18"	12" THICK CONC. OR BRICK BULKHEADS REQUIRED (2). UNLESS OTHERWISE NOTED ON THE PLAN
8"	0.312	18"	
12"	0.406	24"	
16"	0.469	30"	
20"	0.563	36"	
24"	0.563	42"	

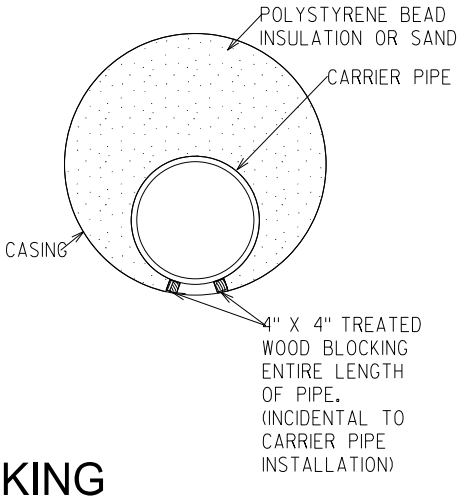

BORING OR JACKING WITH CASING PIPE

THIS PAGE INTENTIONALLY LEFT BLANK

CITY OF ALTOONA

S P E C I F I C A T I O N S

DIVISION 2400 - CONCRETE PAVING

2400.1 - DESCRIPTION

2400.1.1 - General

Work in this section shall consist of constructing Portland cement concrete pavement, curb and gutter, sidewalk, driveways, and structures of the required design and dimension, as shown on the plans and details as provided by the contract. The labor, materials, and equipment provided by the Contractor shall be of the quality, quantity, and condition necessary to complete the work in a **top quality manner.**

All work in this division shall conform to the requirements of comparable sections of the WSSHSC including Sections 415, 501, 505, 601, 602 except as modified within this specification.

2400.1.2 - Guarantee

Section 700.20.1 of the General Conditions states that the Contractor guarantees all concrete work for a period of three years following the date of final acceptance of the work by the City. The intent of this extended guarantee period (i.e.-second and third year) is not to guarantee concrete against normal and expected thermal cracking of curb and gutter or pavement, but, rather, to protect the City from full scale failure of concrete materials displayed through scaling, spalling, or joint failure. In general, items which are being repaired or replaced through the current one year guarantee will continue to be handled in the same way. Failures of a larger magnitude will be considered for replacement through the extended guarantee period.

2400.2 - MATERIALS

2400.2.1 - General

All materials used for the production of concrete (cement, water, aggregates, and admixtures) shall conform to the requirements of this section. Prior to beginning any work, the Contractor must supply a concrete mix design for approval by the Engineer.

2400.2.2 - Requirements

2400.2.2.1 - Type of Cement and Percent Air

All concrete placed shall be Grade “A” or Grade “C” (high-early strength), air-entrained concrete containing 6% air (plus or minus 1.5%). Concrete being placed with the use of a slip form paving machine shall contain 6% to 7-1/2% air in front of the machine.

2400.2.2.2 - Quantity of Cement for Concrete

The concrete for driveways shall have a minimum of 658 pounds of cement per cubic yard of concrete. The concrete for curb and gutter and sidewalk shall contain 611 pounds of cement per cubic yard of concrete.

2400.2.2.3 - Minimum Compressive Strength

All concrete shall have a compressive strength of 4000 PSI in 28 days, and shall achieve 75% strength in 7 days.

2400.2.2.4 - Concrete Temperature

All concrete delivered for use at the job site shall have a minimum temperature of 50 Degrees F. and a maximum temperature of 80 Degrees F.

2400.2.2.5 - High-Early Concrete

The Contractor shall use high-early strength concrete when specified in the contract documents. If not specified, the Contractor may, at his own expense, elect to use high-early strength concrete in order to expedite the work.

2400.2.2.6 - Admixtures

Air-entraining agents are the only admixtures allowed to be used without the Engineer's consent. Any other admixtures (retarders, accelerators, water reducers, pozzolans, fly ash, etc.) must be approved by the Engineer prior to their use.

2400.2.3 - Ready-Mix Concrete

Ready-mixed concrete shall meet the requirements of the Specifications for Ready-Mixed Concrete, ASTM Designation C-94, except as modified below:

(a) Concrete mixed completely in truck-type mixers shall be mixed between 70 and 100 revolutions at designated mixing speed. All revolutions after 100 shall be at agitating speed.

(b) All concrete shall be deposited on the job site within 1-1/2 hours after introduction of the mixing water.

(c) Rejected loads of concrete shall not be retempered or adjusted by additional ingredients.

(d) With each load of concrete delivered to the job there shall be furnished by the ready-mix plant a duplicate delivery ticket, one copy to be retained by the Contractor and the other given to the City. Delivery ticket shall include the plant location, time and type of mix, and cubic yards.

(e) Batch hopper scales shall be tested and approved by the Local Sealer of Weights and Measures. The Wisconsin Department of Transportation, Division of Highways, or an approved testing services at intervals not exceeding twelve months. The hopper scales or portable plants shall have an approval after each movement of the plant.

(f) The Engineer reserves the right to require that Portland Cement Concrete be produced in a plant which complies with the requirements of the National Ready Mix Concrete Association certification plan.

2400.2.4 - Cement

2400.2.4.1 - General

All cement shall be delivered to the job site in original packages bearing the type and brand name along with the manufacturer's stamp. Bulk cement may only be used at the ready-mix plants. Cement-containing lumps or crusts shall not be used. Masonry cement shall comply with the requirements of ASTM Designation C-91.

2400.2.4.2 - Air Entrained H.E.S. Concrete

Cement for H.E.S. concrete shall be Type IIIA (Air-Entrained High-Early Strength).

2400.2.4.3 - Concrete Pavement, Curb & Gutter, Curb, Sidewalk & Driveway

Cement for concrete shall be Type IIA (Air-Entrained - Portland Cement).

2400.2.5 - Aggregates

Aggregates shall comply with ASTM Designation C-33, Specifications for Concrete Aggregates, except as modified:

2400.2.5.1 - Fine Aggregates

Fine aggregate shall consist of sand composed of clean, tough, durable grains of approved inert materials from natural deposits and shall conform to the grading requirements shown in the following table.

GRADING REQUIREMENTS FOR FINE AGGREGATES	
Sieve Sizes	**Percentage Passing By Weight**
3/8 Inch	100%
No. 4	95-100
No. 8	80-100
No. 16	50-85
No. 30	25-60
No. 50	5-30
No. 100	0-10

2400.2.5.2 - Coarse Aggregates

Coarse aggregate shall consist of clean, hard, tough, durable crushed rock, or crushed gravel free from adherent coatings. Coarse aggregate utilized for concrete pavement and the adjacent curb and gutter shall have a minimum of two fracture faces. Coarse aggregates utilized for concrete sidewalk, concrete driveways, and concrete curb and gutter adjacent to asphalt pavement shall maintain one fracture face on 85 percent of the coarse aggregates. All loads, which do not conform to this requirement, shall be rejected. All coarse aggregates shall be free from vegetation or other deleterious substances and shall meet the grading requirements shown in the following table. The City shall be notified of the aggregate source and permitted to approve the aggregate prior to delivery to the batch plant site.

GRADING REQUIREMENTS FOR COARSE AGGREGATES	
Sieve Size	**Percentage Passing By Weight**
	No. 1: (Size 67)
1 Inch	100%
3/4 Inch	90-100
3/8 Inch	30-55
No. 4	0-10
No. 8	0-5
	No. 2: (Size 4)
2 Inch	100
1-1/2 Inch	90-100
1 Inch	20-55
3/4 Inch	0-15
1/2 Inch	0-5

Gradations not meeting these requirements may be accepted if the composite gradation of No. 1 combined with No. 2 meets the gradation of Size No. 467 of ASTM Designation C-33.

2400.2.6 - Water

A public water supply shall be used wherever possible. Where public water supply is not available, water, which is free of oil, acid, excessive alkalinity, organic matter, and other harmful ingredients, may be used upon the approval of the Engineer.

2400.2.7 - Mortar

Mortar to be used for joints for sewer pipe or masonry units, for plastering or for any other specified use shall be a preblended air-entrained underground utility mortar mix manufactured by SPEC MIX or approved equal which meets the requirements for mortar of ASTM Designation C-270.

2400.2.8 - Steel Reinforcement Bars

2400.2.8.1 - Requirements

Reinforcement bars for reinforced concrete construction shall consist of deformed steel tie bars that conform to the specifications for deformed steel bars, Grade 60 as specified in ASTM Designation A-615. Structural steel shall conform to ASTM Designation A-283 or A-306. All bars shall be epoxy coated and shall have a workmanlike finish, shall be free from dirt, excessive rust, oil or other coatings, and shall not be appreciably bent out of true shape.

2400.2.8.2 - Markings

The brand or distinctive mark of the manufacture shall be legibly rolled on all deformed bars. Each shipment shall be tagged with the manufacturer's test identification number. Bars bent to shape shall be bundled and suitably tagged to designate the shape, and size and length of bars.

2400.2.8.3 - Rods for Internal Ties

Rods shall be used as internal ties for concrete forms. Such rods shall be equipped with suitable lock nuts and tightening devices and shall be arranged so that no metal remains within one inch of the inside finished concrete face after forms have been removed. The use of wire ties will be allowed when approved by the Engineer.

2400.2.8.4 - Shop Drawings

The Contractor shall furnish for approval of the Engineer, three (3) sets of prints of reinforcing bar details showing number, size, and shape of bars, and a reinforcing bar-setting diagram showing location of bars in place. No reinforcing bars shall be ordered until one set of prints has been returned to the Contractor with the approval of the Engineer.

2400.2.8.5 - Tie Bars

Tie bars shall be 1/2" x 24" deformed bars, spaced at 3 foot apart on longitudinal joints.

2400.2.9 - Dowel Bars

Dowel bars shall be plain round bars conforming to the requirements of ASTM 615, Grade 60. The dowel bars shall be 1 1/4 inch diameter, 20 inches long, spaced one foot apart on the transverse joints and shall be free from flattening or burring on the ends caused by shearing. Dowel bar assemblies shall be fabricated with dowel bar spacing at 12 inches on center, in units not less than 12 feet in length prior to being placed in position on the subgrade. All dowel bars shall be epoxy coated in accordance with AASHTO M284 except that the film thickness shall be 5 to 10 mils after curing.

2400.2.10 - Expansion Joint Materials

Transverse expansion joint material shall conform to the requirements of the Standard Specifications for Preformed Expansion Joint Filler, Non-Extruding and Resilient Bituminous Type for Concrete, AASHTO Designation M-213-74.

2400.2.11 - Impervious Coating

Liquid curing compounds for curing concrete pavement shall conform to the requirements of the Specification for Liquid Membrane-Forming Compounds for Curing Concrete, AASHTO Designation: M 148, Type 1, Clear. Acceptable sealers are AS-1 Achro Seal 1315, manufactured by TK Products, or approved equal.

2400.2.12 - Hot-Poured Elastic Sealant

This material shall conform to the requirements of the specifications for joint sealant, hot-poured, for concrete and asphalt pavements ASTM Designation: D 3405.

2400.2.13 - Cold-Poured Type

This material shall conform to the requirements of Federal Specifications TT-S-1543, Class A, and TT-S-230, Type II. The sealant shall be a one-part, low-modulus silicone rubber with an ultimate elongation of 650 percent.

2400.2.14 - Preformed Elastomeric Compression Joint Seal

This material shall conform to the requirements of the Specification for Preformed Polychloroprene Elastomeric Joint Seals for Concrete Pavements, AASHTO Designation: M220.

2400.2.15 - Fly Ash

The fly ash R-factor, as defined in the ACI Manual of Concrete Practice, Part I, Publication No. 266.3R-87, Section 2.2.14, shall not exceed 1.5.

2400.2.16 - Form Coating Oil

The form coating oil shall be an approved chemical release agent containing no ordinary lubrication oil, conventional form oil, fuel oil or kerosene. The chemical release agent shall provide positive separation between forms and the concrete surface, shall not penetrate, stain or leave a residual film on the concrete surface and shall not attract dirt or other deleterious matter. The flash point of the chemical release agent shall not be less than 150 degrees F when tested in accordance with ASTM D92.

2400.2.17 – Truncated Dome Detectable Warning Field

The truncated dome detectable warning field manufacturer shall conform to the Wisconsin Department of Transportation Pre-Qualified Product List. The color shall be selected by the City.

2400.2.18 – Flexible Joint Sealant

Flexible joint sealant shall conform to AASHTO Specification M-198, Kent-Seal or approved equal may be used, and shall be 3 1/2” x 3/8” for adjusting rings.

2400.3 - CONSTRUCTION METHODS

2400.3.1 – General

The Contractor shall conform to the methods set forth in this section to complete the work shown on the Plans and Details. Construction operations shall not be started until the Engineer has determined that all equipment, tools, and accessories necessary to complete the work are on the site and meet the specification requirements as to design, capacity, and mechanical condition. The Contractor shall also have a manufacturer's manual that explains the operation and adjustments of the major pieces of power operated equipment to be used.

2400.3.2 - Sawing Concrete

Where new construction meets existing concrete curb and gutter, concrete sidewalk or concrete driveway, the existing edge shall be straight and at near right angles to the work. This may require sawing of the existing concrete. The depth of the saw cut shall be a minimum of 1/3 the thickness of the concrete to be sawed. The sawing operation shall be performed so that the surface to remain is generally vertical for its full depth.

2400.3.3 - Full Depth Sawing

Where new concrete pavement meets existing concrete pavement, the edge of the existing concrete pavement shall be sawed straight and at near right angles to the work. The depth of the saw cut shall be the full thickness of the concrete pavement to be sawed. The sawed face of the concrete pavement shall be vertical.

2400.3.4 - Forming

2400.3.4.1 - General

All forms shall be of steel construction, free of debris, bends, and twists and shall be oiled to the satisfaction of the Engineer prior to use. Wooden forms may be used **only** with the Engineer's approval on short radius curves and where accessibility is limited. In addition, wood forms must be constructed of the proper size and material to do a **top quality job.**

All forms shall be securely staked and braced to the required line and grade as established by the Engineer. Flexible or curved forms of proper radius shall be used for curves of 100-foot radius or less.

2400.3.4.2 - Concrete Pavement

Concrete pavement shall be placed using the traditional form method or by using a slip-form machine. If a machine is used, the resulting concrete pavement shall be of such quality as to equal or exceed that produced by formed methods.

2400.3.4.3 - Concrete Curb and Gutter

Concrete curb and gutter may be placed using the traditional form method or by using a slip-form machine. If a machine is used, the resulting curb and gutter shall be of such quality as to equal or exceed that produced by formed methods. The tapers at driveways with a normal boulevard shall be a minimum of 1.5 feet in length. The tapers at driveways with the sidewalk at the back of the curb and gutter shall be a minimum of 5 feet in length.

The City reserves the right to adjust the grade of the curb and gutter after the form or stringline has been initially set. The Engineer shall make adjustments to the forms or stringline to match the curb and gutter or other existing conditions. The Contractor and the Engineer shall meet onsite to discuss grades of curb and gutter prior to setting forms or final grading for the curb and gutter. No additional compensation shall be made for resetting of forms or stringline to match existing curb and gutter or existing conditions as directed by the Engineer.

2400.3.4.4 - Concrete Sidewalk

All concrete sidewalks must be placed using the traditional form method, unless prior written approval is given by the Engineer for the use of a slip-form machine. The Engineer reserves the right to terminate the use of the slip-form machine at any time during its use. Forms shall be steel forms or wood forms. Wood forms shall be of sufficient strength and properly staked to prevent bowing or deforming.

The City reserves the right to adjust the grade of the sidewalk after the form or stringline has been initially set. The Engineer shall make adjustments to the forms or stringline to match existing topographic features. The Contractor and the Engineer shall meet onsite to discuss grades of sidewalk prior to setting forms or final grading for the sidewalk. No additional compensation shall be made for resetting of forms or stringline to match existing topographic features as directed by the Engineer.

2400.3.4.5 - Concrete Driveway

All concrete driveways must be placed using the traditional form method. The forms shall be of the same height as the thickness of the concrete driveway being poured. The driveway form shall be of sufficient strength as to not bow or deform when concrete is placed.

The City reserves the right to adjust the grade of the driveway after the form or stringline has been initially set. The Engineer shall make adjustments to the forms or stringline to match the existing driveways. The Contractor and the Engineer shall meet onsite to discuss grades of driveways prior to setting forms or final grading for the driveway. No additional compensation shall be made for resetting of forms or stringline to match the existing driveways as directed by the Engineer.

2400.3.4.6 - Keyways

Keyways in the edges of pavements, if required, shall be constructed to the dimensions and at the locations shown in the plans using metal keyways. If keyway forms are made of 16 gauge metal or heavier, they shall be bolted, riveted, or welded to the side forms and may be removed from the edge of the slab. Metal keyway forms lighter than 16 gauge shall be held rigidly against the side forms be approved means and shall not be removed from the edge of the slab.

2400.3.5 - Foundation/Subgrade Preparation

2400.3.5.1 - Compaction

The foundation shall be thoroughly compacted to insure stability. All compaction shall be performed by a mechanical compactor that will compact the foundation to 95% of the modified proctor density. In cuts, the foundation shall be sufficiently wide enough to perform the required work, and on fills, the foundation shall be constructed to a width extending no less than one foot beyond each form.

2400.3.5.2 - Removal of Roots

Any existing roots which conflict with the placement of concrete curb and gutter, sidewalk, or driveway approaches shall be removed as necessary. Root removal shall be in accordance with Section 2100.3.4 – Tree Protection. This removal shall be considered as incidental to the concrete construction.

2400.3.5.3 - Subgrade Inspection

After the forms are set and the subgrade thoroughly compacted, the forms and subgrade must be checked and **approved** by the Engineer to insure proper thickness. The Contractor is responsible to notify the Engineer for the form and subgrade inspection.

2400.3.6 - Placing of Concrete

The subgrade shall be thoroughly moistened immediately **prior** to placing concrete. The concrete shall be deposited in the forms to the proper depths, thoroughly consolidated, spaded sufficiently to bring mortar to the surface, after which it shall be struck off and floated. The contractor shall strike off and consolidate concrete according to Section 415.3.11 of the D.O.T. Specifications. The surface shall then be checked longitudinally with a straightedge and "Bull Floated" only where necessary. A 10-foot straightedge shall be used along the gutter flow line to avoid water pockets. The steel divider plates shall not be removed until concrete has set long enough to prevent settling.

2400.3.7 - Finishing of Concrete

The edges of the concrete along forms and joints shall be rounded with a 1/2-inch radius edger. Before the mortar has set, the surface of the concrete shall receive a finish. The concrete pavement finish shall be turf-drag, curb and gutter finish shall be troweled and brushed, and sidewalks and driveway finish shall be lightly broomed.

The final surface finish shall conform to Section 415.3.11.6, D.O.T. Specifications.

2400.3.8 - Concrete Consistency

The consistency of the mixed concrete shall be uniform and such that the cement and other ingredients are uniformly distributed throughout the mass and so the mortar will cling to the coarse aggregate. The mixed concrete shall not be sufficiently wet to flow and segregate, nor of a mealy, dry consistency. The quantity of water to be used shall be the **minimum** amount consistent with the desired workability as determined by the Engineer, and it shall not be varied without the consent of the Engineer.

In general, concrete placed in forms and consolidated by hand methods shall have a slump of **two to four** inches, and when consolidated by vibration shall have a slump of **one to three** inches. When consolidation is by hand methods, the Engineer may increase the slump **up to five** inches in places where difficulty is encountered in securing satisfactory placing.

2400.3.9 - Handicapped Curb Ramps

2400.3.9.1 - Requirements

Curb ramping shall be of concrete construction and the ramp shall be a minimum of 60 inches wide. On ramps where a boulevard exists between the sidewalk and curb line, the tapers of the ramp shall slope from the sidewalk or apron elevations to the ramp elevation with the widest portion of the side slope a minimum of 18 inches with a desired taper of 24 inches wide at the curb. On ramps where the sidewalk is immediately behind the curb line, the sides of the ramp shall slope from the sidewalk to the ramp elevation with the widest portion of the side slope not less than 5 feet (i.e.-1:10 slope) at the curb. The ramp slope may not exceed one inch vertical to 12 inches horizontal from the flow line elevation of the curb, unless space limitations on existing sites prohibit the desired slope. The curb opening shall be not less than 60 inches or more than 80 inches wide at the flow line of the curb. All handicapped curb ramps shall be constructed with 6-inch thick concrete.

2400.3.9.2 - Locations

The curb ramping shall be in one of the following locations:

(a) At the center of the curve of the street corner, and containing truncated dome detectable warning pattern. The entire curb corner may not be made into a ramp, but shall provide for standard sidewalk apron and curb on both sides of a ramp.

(b) If locating the ramp in the center of curve on the street corner is not feasible; the ramp shall be centered on line with the crosswalk and pedestrian traffic and containing truncated dome detectable warning pattern.

(c) If both (a) and (b) are not feasible, a suitable location, determined by the Engineer, as near to the crosswalk as practicable will be found.

2400.3.9.3 – Truncated Dome Detectable Warning Field

The truncated dome detectable warning field shall be 4-foot wide by 2-foot and located as shown on the detail drawing 2400.3. The truncated dome detectable warning field shall be constructed in accordance with the manufacturers specifications and/or as directed by the Engineer. The edge of the truncated dome warning field shall fit the surrounding concrete with no variation in height at the edge.

2400.3.9.4 – Clean Up of Truncated Dome Detectable Warning Field

The truncated dome detectable warning field shall be free of concrete, curing compound, and other materials. The Contractor shall clean up the truncated dome detectable warning field as directed by the Engineer. If the truncated dome detectable warning field cannot be cleaned up, the Contractor shall remove the pedestrian ramp and replace at its own expense.

2400.3.10 - Expansion and Contraction Joints

2400.3.10.1 - General

Expansion and contraction joints shall be constructed of the type and dimension and at the locations shown on the Plans and Details or as directed by the Engineer.

2400.3.10.2 - Location

Contraction joints shall be perpendicular to the concrete surface and shall be a minimum depth of 1/4 of the thickness of the pavement slab but not less than 1-1/2 inch in depth. The joints shall be uniformly spaced a maximum of 16 feet apart for pavement, 10 feet apart for curb and gutter, and 5 feet apart for sidewalk unless otherwise directed by the Engineer. Transverse contraction joints shall be located a minimum of 6’ and a maximum of 10’ from the nearest construction joint.

2400.3.10.3 - Knife Joints

To avoid premature cracking of contraction joints every fifth joint shall be made with suitable separator plates or a knife joint. The knife for cutting joints shall be approved by the Engineer before its use will be permitted.

2400.3.10.4 - Transverse Construction Joints

All transverse construction joints in concrete pavement shall be constructed with No. 4 (1/2”) deformed bars, 24” long, and 12” center to center. Transverse construction joints shall be located a minimum of 4 feet from the nearest contraction joint and may be constructed either parallel to the contractor joints or at 90 degrees to the centerline. Transverse contraction joints shall be located at a uniform spacing of 16’ (plus or minus 1’)

2400.3.10.5 - Expansion Felt

2400.3.10.5.1 - Sidewalk and Driveway

The expansion joint material for sidewalks shall be 1/2-inches wide. This expansion joint material shall be placed in the sidewalk perpendicular to the surface, and shall be formed by inserting joint material during construction. In sidewalk, the joints shall be located at intersecting and existing sidewalks, along privately owned concrete sidewalks and driveways, where the sidewalk pedestrian ramp or driveway approach abuts the curb, on each side of abutting driveways, and at a maximum of 50 feet of new sidewalk. One-inch wide expansion joints shall be placed between the sidewalk and any abutting buildings. It shall extend the full depth of the concrete and shall be left in place, flush with the finished surface.

2400.3.10.5.2 - Curb and Gutter

The expansion joint material for curb and gutter shall be a 6” x 6-1/2” x 3/4” expansion joint felt and shall be placed in the curb and gutter perpendicular to the surface. The expansion joint felt shall be formed by inserting the expansion joint material during construction. Locations for expansion joints shall be in the curb and gutter approximately 3 feet on each side of all inlets, at all radius points, at all intersections with existing curb and gutter, and at a maximum of 300 feet of new curb and gutter.

2400.3.10.6 - Sawing Contraction Joints

If machine methods are used for forming and finishing, the Contractor shall saw contraction joints unless otherwise approved by the Engineer. The Contractor shall be entirely

responsible for determining the proper time to saw the joints to avoid damage to the surface by sawing equipment and to control random cracking due to contraction of the slab. Should any random contraction cracking occur, the Contractor shall replace the entire affected area at no cost to the owner. Sawing of contraction joints shall be considered incidental to concrete pavement construction. Longitudinal joints shall be parallel with and transverse joints shall be at right angles to the centerline of the pavement or as directed by the Engineer.

2400.3.11 - Curing of Concrete

2400.3.11.1 - General

Unless otherwise provided in the contract or otherwise approved by the Engineer, all concrete shall be cured by either the impervious coating method, the wet fabric method, the paper method, or the linseed oil method.

Failure to provide sufficient approved curing materials and failure to properly perform the requirements hereinafter prescribed shall be cause for immediate suspension of concrete placing operations.

2400.3.11.2 - Impervious Coating Method

2400.3.11.2.1 - Spraying of Material

Immediately after the finishing operations has been completed and the free water has disappeared, the concrete surface shall be sealed by spraying on it a uniform coating of curing material in such a manner as to provide a continuous water-impermeable film on the entire concrete pavement surface. The material shall be applied in one application to form a uniform coverage at the rate of not less than one gallon per 300 square feet of surface area.

If the concrete pavement is constructed by the slip-form method, the sides of the slab shall be cured as provided for curing the pavement surface. When forms are used and removed within 72 hours after placement of the concrete, the edges of the pavement shall be coated, within 30 minutes after form removal, with curing compound as provided for the surface.

2400.3.11.2.1 - Respraying Damaged Areas of Coating

In the event the coating is damaged within 72 hours after being applied due to joint sawing operations or otherwise, the affected areas shall be recoated without delay and at the same rate as prescribed above for the original application.

2400.3.11.2.2 - Equipment Failure

Should the spraying equipment fail and duplicate spraying equipment is not immediately available, further placing of concrete shall be suspended until properly operating spray equipment is provided, and the portion of finished concrete not satisfactorily coated with the curing compound shall be cured by other means satisfactory to the Engineer.

2400.3.11.3 - Wet Fabric Method

2400.3.11.3.1 - Initial Curing

The initial curing by this method shall consist of placing wetted burlap directly upon the concrete surface following the final finishing, when the concrete is still wet but firm enough to support the burlap without marring the surface. While the concrete is fresh, water shall be applied to the burlap in a fine spray to avoid damaging the concrete, and the burlap shall be kept wet.

2400.3.11.3.2 - Final Curing

On the day following the placing of the concrete, the final curing shall begin by the addition of another layer of burlap, which shall be kept wet for 72 hours.

2400.3.11.3.3 - Maintenance

The concrete surface, at any time during the initial or final curing period, shall show the presence of free water under the covering. No part of the concrete shall be uncovered for more than 30 minutes at a time during the curing period.

2400.3.11.3.4 - Curing Sides of Concrete Pavement

The wet burlap or fabric shall be folded down and held in contact with the sides of the pavement as soon as the fabric is placed on the surface in the case of slip-formed pavement, and as soon as the forms are removed in the case of formed pavement unless 72 hours shall have expired since the time of placement of the pavement.

2400.3.11.4 - Paper Method

As soon as the concrete has been finished and has hardened sufficiently to prevent excessive marring of the surface, the surface and exposed sides of the concrete shall be wetted by

applying water in a spray fine enough to avoid injury to the fresh concrete. Immediately after the water has been applied, the concrete shall be covered with paper or paper blankets.

The paper shall be placed to avoid injury to the concrete. The paper shall remain in place for at least 72 hours, except where temporary removal is required to remove forms or do other necessary work. The paper shall not be removed from any part of the concrete for more than 30 minutes and, should the concrete surface appear dry upon replacing the paper, it shall be rewetted.

2400.3.11.5 - Linseed Oil Method

Linseed oil treatment may be required when concrete is placed **after October 1** if required by the Engineer. The linseed oil shall be applied in two applications according to the following directions and specifications:

(a) The curb and gutter or pavement should be dry and swept clean with the temperature above 50 Degrees F.

(b) The first coat shall be composed of 50-50 mixture of commercial boiled linseed oil and mineral spirits and should dry in 2 to 3 hours at the above temperature.

(c) The second application shall be 75-25 mixture of commercial boiled linseed oil and mineral spirits and may be applied after the first coat has obtained a dry appearance.

(d) The nozzle of the spraying equipment must be held close to the pavement to get complete coverage. Note: One gallon of the mixture will cover approximately 50 square yards.

2400.3.12 - Sealing Joints

2400.3.12.1 - Requirements

All contraction and expansion joints in concrete pavement shall be sealed with a hot-poured sealer conforming to Section 2400.2.13 of these specifications. All sawed longitudinal joints shall be sealed with hot-poured sealer conforming to Section 2400.2.13 of these specifications.

The operation of sealing shall be performed as soon as practicable upon elapse of the curing period and in any event prior to the time traffic of any kind uses the pavement.

2400.3.12.2 - Inspection and Approval

No joints will be sealed until they have been inspected and approved by the Engineer. Should any spalling of the sawed edges occur that would in the judgement of the Engineer detrimentally affect the joint-sealing ability, such spalled areas shall be patched with an approved epoxy which shall be allowed to harden prior to installation of the joint seal. Each patch shall be true to the intended neat lines of the finished cut joint.

2400.3.12.3 - Cleaning Joints

2400.3.12.3.1 - Equipment

When cleaning joints, the air compressors shall have suitable water and oil traps to eliminate oil and moisture adulteration of the concrete. Jets of water and compressed air shall have sufficient pressure to thoroughly and completely clean the joint of any slurry, dust or debris, except that a minimum of 80 psi shall be used for compressed air.

2400.3.12.3.2 - Initial Cleaning

Immediately after the sawing of the joint is completed to final configuration, the slurry resulting from the sawing operation shall by completely removed from the joint and immediate area by flushing with a jet of water under pressure. The joint shall then be blown with a jet of clean, oil-free compressed air to remove the flushing water, all cuttings or other debris remaining on the faces or in the joint opening. When the joint is drysawed, the flushing with water may be omitted when the joint can be satisfactorily cleaned by compressed air.

2400.3.12.3.3 - Sandblasting or Waterblasting

The newly exposed joint faces shall be cleaned by sandblasting, or by waterblasting using a minimum of 1500 psi pressure. A multiple-pass technique shall be used until the surfaces are free of sawcutting fines that might prevent bonding.

2400.3.12.3.4 - Final Cleaning

For final cleaning immediately prior to installation of the sealer, the joints shall be blown clean with compressed air and left completely dry and free of sand. When placement of the joint sealant is delayed such as overnight or when debris or moisture accumulate in the joint or on the faces of the joint, the joint shall be blown out with clean, oil-free compressed air immediately prior to placement of the joint sealant.

2400.3.12.4 - Application of Joint Sealer

2400.3.12.4.1 - General

The application of the joint sealer shall be made only when the joint surfaces are clean and dry.

2400.3.12.4.2 - Equipment

The sealing compound shall be heated to the pouring temperature recommended by the manufacturer in an approved kettle or tank, constructed as a double boiler, with the space between the inner and outer shells filled with oil or other satisfactory heat transfer medium. The heating kettle shall be equipped with a mechanical agitator, positive temperature control and an approved dial thermometer for checking temperatures of the compound. The heating kettle, if and when operated on concrete, shall be properly insulated against the radiation of heat to the concrete surface.

2400.3.12.4.3 - Sealant Temperature

The sealing compound shall not be heated above the maximum safe heating temperature. The maximum safe heating temperature shall be determined from tests made on samples from each lot or shipment of the material delivered to the project. When so approved by the engineer, the manufacturer's recommended maximum safe heating temperature may be used in lieu of test determinations where relatively small quantities of sealer are used. Any material heated above the maximum safe heating temperature shall be discarded.

2400.3.12.4.4 - Pouring of Joints

Pouring of joints shall be made when the sealing material is at the required temperature and, insofar as practicable, the sealing compound shall be maintained at a uniform temperature during pouring operations. Pouring shall not be permitted when the temperature of the sealing compound in the applicator, as it is app1ied to the joint, is more than 10 F below the recommended pouring temperature. Pouring of the molten sealer in the joint opening shall be done with such equipment that the sealer completely fills the joint opening without overflowing on the adjoining surface and when finished, after shrinkage, the sea1er is approximately flush with the adjoining surfaces. In the event satisfactory sealing of a joint is not accomplished in a single pouring; the Sealing compound shall be placed in two pouring. At least one-half of the required amount shall be placed in the first pouring, and the second pouring shall follow the first

as soon as practicable after the first pouring has attained maximum shrinkage but not later than an hour after the first pouring.

2400.3.13 - Protection of Concrete

The Contractor shall be responsible to erect, maintain, and occupy, if necessary, any suitable barricades to exclude any pedestrian or vehicular traffic from the newly placed concrete. Traffic will not be allowed until after the concrete has cured to a minimum compressive strength of 3000 PSI. All concrete damaged due to poor protection shall be repaired at the Contractor's expense.

It shall be the Contractor's responsibility to supply a safe and adequate alternative for pedestrian traffic as deemed necessary.

2400.3.14 - Cold Weather Pouring

The placement of concrete shall be discontinued on or after **October 1 through May 15** of any year, or when a descending air temperature in the shade falls below 40 Degrees F. nor resumed until an ascending air temperature reaches 35 Degrees F., except by specific written permission by the Engineer. The Contractor may pour concrete after October 1 provide permission is received in writing from the City Engineer and the Contractor has available cold weather protection and curing as outlined in Section 2400.3.15.

2400.3.15 - Cold Weather Protection/Curing

The Contractor shall take all precautions necessary to prevent freezing of the concrete and shall produce quality concrete. At any time of the year, when the Weather Bureau forecasts a chance of freezing temperatures within the next 24 hours, all concrete placed within the preceding 72 hours shall be covered with curing paper and straw (minimum 6 inches) or with polyethylene sheeting conforming to the requirements for white opaque polyethylene film of AASHTO M-171 and as directed by the Engineer. No concrete shall be placed on a frozen subgrade.

2400.3.16 - Concrete Testing

The Contractor shall cooperate in any manner necessary with the Engineer, which shall include furnishing the concrete to obtain samples, in accordance with the following concrete tests:

ASTM C-143 - Slump Test
ASTM C-231 - % Air Test
ASTM C39 - Compression Test

The Engineer will test as deemed necessary. If for any reason the initial sample does not meet the proper testing requirements, further tests will be done as directed by the Engineer. The cost will be paid for by the Contractor. All concrete placed which does not meet the requirements, shall be removed and replaced by the Contractor, with no cost to the Owner. If the Engineer elects to accept the failed concrete, a reduction in the bid cost may be negotiated, to the satisfaction of the Owner.

2400.3.17 - Adjustment of Manhole and Inlet Castings

2400.3.17.1 - General

Manhole castings shall not be set to finished grade until just prior to the placing of the concrete pavement.

2400.3.17.2 - Removal of Manhole Castings

Prior to the beginning of any excavation or grading on a street, the Contractor shall remove all manhole castings from the manholes and cover the manhole opening with a steel plate suitable to support traffic.

2400.3.17.3 - Inspection of Existing Manhole Castings

The Owner shall inspect the removed castings, and if they are unsuitable to be reused, the Owner shall furnish new casting assemblies and remove the old castings from the site.

2400.3.17.4 – Monolithic Shimming of Inlets and Manhole Castings

All manholes and inlets poured integral to the concrete pavement shall be monolithically shimmed. The contractor shall vibrate the concrete around manholes and inlet castings by using suitable spud-type vibrator. The Contractor shall not box out for manholes or inlets without the permission of the Engineer.

All concrete adjusting rings shall be set in a full bed of mortar to the required elevation. A minimum thickness of 1/2-inch of mortar shall be placed and maintained between the adjusting rings and the manhole masonry and between all adjusting rings. The manhole casting shall be monolithic shimmed during the concrete paving operation. The manhole casting

shall be set 1/8 inch below the finished concrete pavement. Multiple concrete adjusting rings will not be allowed where one concrete adjusting ring will suffice. The minimum thickness of a concrete adjusting ring shall be 3-inches. Concrete adjusting rings 2-inches or less in thickness will not be allowed.

2400.3.17.5 - Setting Adjusting Rings and Inlet Castings in Concrete Curb and Gutter

Where the height of required adjusting rings is greater than 4-inches, the inlet shall be adjusted using a combination of concrete adjusting rings. Multiple concrete adjusting rings will not be allowed where one concrete adjusting ring is sufficient. The minimum thickness of a concrete adjusting ring shall be 3-inches. Concrete adjusting rings 2-inches or less in thickness will not be allowed.

Concrete adjusting rings shall be set in a full bed of mortar to the required elevation. A minimum thickness of 1/2-inch of mortar shall be placed and maintained between the adjusting rings and the manhole masonry and between all adjusting rings. Inlet castings shall be laid on a full bed of mortar or on a 3 ½” x 3/8” bed of flexible joint sealant.

The inlet casting shall be set 1/8 inch below the finished concrete curb and gutter.

2400.3.17.6 - Notification

The Contractor shall notify the Engineer 24-hours in advance of the adjusting of all manhole and inlet castings. After the Contractor has arrived at the project site to adjust manhole castings, the Contractor shall again notify the Engineer. No manhole casting shall be adjusted without the Engineer present. If a manhole has been adjusted without the Engineer present, the Contractor shall remove the manhole casting and rings and reset the rings and manhole casting in the presence of the Engineer.

2400.3.17.7 - Maximum Number of Adjusting Rings

The maximum total amount of casting adjustment using concrete adjustment rings shall be twelve (12) inches. If, during the adjustment of the casting to the final grade, the total amount of adjustment rings exceeds twelve (12) inches, the Contractor shall do a major adjustment in accordance with Section 200.3.17.8.

2400.3.17.8 - Major Manhole Adjustment

The major adjustment shall be the installation of the manhole riser section to match the change in elevation of the finished casting grade. For manhole casting elevations, which are too high, the Contractor shall remove the existing riser section and replace it with a new riser of the proper size. For manhole casting elevations, which exceed the allowable amount of adjustment rings, the Contractor shall remove the excess amount of rings and insert a new riser section of the proper size.

2400.3.18 - Adjust Valve

2400.3.18.1 - General

All utility valve boxes (water, curb, gas, etc.) which fall within the forms for concrete operations, shall be adjusted to the proper grade. The Contractor shall locate and adjust all underground utilities prior to pouring the concrete pavement. Valve boxes shall not be set to finished grade until just prior to the placing of the concrete pavement.

2400.3.18.2 - Inspection of Existing Boxes

All water valve boxes shall be inspected by the City of Altoona prior to construction to determine condition. During this inspection, if any valve box assemblies or sections are found to be in need of replacement, the City will have its own contractor replace the valve box assemblies or sections in need of replacement.

2400.3.18.3 - Damaged Boxes

Any valve box assembly or section damaged during construction shall be replaced in kind by the Contractor using materials approved by the Engineer. The repairing of the damaged valve box assembly of section shall be at the Contractor's expense.

2400.3.18.4 - Adjusting Valve Boxes to Finished Grade

The valve box shall be adjusted 1/8 inch below the finished concrete pavement. After the valve box is set to grade it shall be compacted with granular backfill. The Contractor shall have personnel available to adjust valve boxes that have been incorrectly set or moved during the concrete paving operation to within the tolerances described above.

2400.3.20 - Pavement Ties and Dowel Bars

2400.3.20.1 - General

Where shown on the plans or instructed by the Engineer, the Contractor shall install tie bars or dowel bars in accordance with the D.O.T. Standard Design 8D 1-13, 13C 1-11, 13C 9-6b, and 13C 13-4. Pavement ties shall be installed in all longitudinal joints in new concrete pavement and in locations where new concrete pavement abuts existing concrete pavement.

2400.3.20.2 - Installing Tie Bars

Holes shall be drilled into the edge of the existing concrete pavement for placement of tie bars. Tie bars placed in new concrete pavement shall be hand placed in sawed longitudinal joints and shall be bent bars placed in a keyway attached to the form on a formed joint. Pounding tie bars into concrete pavement or concrete curb and gutter, when the forms are stripped after the initial concrete set is not acceptable.

A quick-setting, non-shrinking, high-strength mortar or epoxy shall be used to grout the pavement ties into the drill holes. The drill holes shall be thoroughly cleaned of drilling dust, debris, and excess moisture prior to grouting. Ample mortar or epoxy shall be placed in the back of the hole and the bar inserted in such a manner that it is uniformly coated with mortar or epoxy and all voids within the drill hole are completely filled. The mortar or epoxy consistency shall be thick enough to prevent excessive flow from the installation.

2400.3.20.3 - Installing Dowel Bars

Dowel bars shall be installed in all concrete pavement contraction joints and locations where new concrete pavement adjoins existing concrete pavement at a typical contraction joint. Dowel bars placed in new concrete pavement shall be mounted in dowel bar basket assemblies, which support the dowel bars at the midpoint elevation of the pavement. Baskets shall be firmly staked to prevent horizontal or vertical displacement while concrete is being placed. Low profile baskets will be required for concrete pavement seven (7) inches thick. Dowel bars shall be aligned perpendicular to the contraction joint and/or parallel to the roadway subgrade and centerline. Free ends of the dowel bars shall be thoroughly greased with an approved agent for one-half of the length plus two inches to prevent the bonding of concrete to the dowel bar. All bar intersections shall be tightly cross-tied in both directions or spot-welded. See WSSHSC Section 415.3.8 – Reinforcement and Section 415-3.9 - Jointing.

2400.4 - MEASUREMENT AND PAYMENT

2400.4.1 - Concrete Pavement

Concrete Pavement will be measured and paid for at the contract unit price per square yard, and shall be full compensation for furnishing, excavating, backfilling, hauling, preparing,

placing, jointing, curing and protecting materials, sawing joints, hot pour sealing of the joints; and for all labor, equipment, tools, and incidentals necessary for constructing the pavement.

2400.4.2 - Concrete Curb and Gutter

Curb and gutter shall be measured and paid for at the contract unit price per lineal foot measured along the base of the curb face. This measurement shall be continuous across driveway and alley entrance returns or ramps. No deduction shall be made for drainage structures installed in the curb and gutter. This price shall be full compensation for all excavation and preparation of foundation, for furnishing all materials including concrete masonry and expansion joint material; for all excavation and preparation of foundation, backfilling, for placing, finishing, protecting, curing, and construction of joints; and for all labor, tools, equipment, and incidentals necessary to complete the work.

2400.4.3 - Sidewalk

Concrete sidewalk shall be measured and paid for at the contract unit price per square foot and shall be full compensation for furnishing all materials including concrete masonry and expansion joint material; for all excavation and preparation of foundation, back filling and disposal of surplus material; for placing, finishing, protecting and curing; and for all labor, tools, equipment and incidentals necessary to complete the work.

2400.4.4 - Driveway Approaches/Handicap Curb Ramps

Concrete driveway approach and handicap curb ramps shall be measured and paid for at the contract unit price per square foot for the thickness of concrete and shall be full compensation for furnishing all materials; for all excavation and preparation of foundation, backfilling and disposal of surplus material; for placing, finishing, protecting and curing; and for all labor, tools, equipment and incidentals necessary to complete the work.

2400.4.5 - Sawing

Sawing shall be measured and paid for at the Contract unit price per lineal foot. This price shall be payment in full for all saw cuts and furnishing all labor, tools, equipment and incidentals necessary to complete the work. Payment for sawing of new concrete pavement for the purpose of creating contraction joints shall be included in the unit bid price for concrete pavement.

2400.4.6 - Sawing Pavement, Full Depth

Sawing Pavement, Full Depth shall be measured and paid for at the Contract unit price per lineal foot. One full depth longitudinal sawcut as deemed necessary by the Engineer through an area of repair will be measured for payment. Two transverse sawcuts, consisting of one transverse cut at each limit or repair will be measured for payment. No additional sawcuts will be measured for payment to assist the Contractor in the removal of the pavement or in reducing the size of the pavement to be removed for ease of transporting. The price bid for Sawing Pavement, Full Depth shall be payment in full all full depth saw cuts and furnishing all labor, tools, equipment and incidental necessary to complete the work.

2400.4.7 - Adjust Manhole Casting in Concrete Pavement

The Contractor shall be compensated for adjusting all manhole casting in concrete pavement at the contract unit price for casting adjustment on the per each basis. This shall be full compensation for furnishing all required materials; for removing, reinstalling and adjusting the castings; and for all labor, tools, equipment, and incidentals necessary for adjusting each casting.

2400.4.8 - Adjust Inlet Casting

The Contractor shall be compensated for adjusting all inlet casting in the curb and gutter at the contract unit price for casting adjustment on the per each basis. This shall be full compensation for furnishing all required materials; for removing, reinstalling and adjusting the castings; and for all labor, tools, equipment, and incidentals necessary for adjusting each casting.

At locations where inlets are constructed with no curb and gutter, the Contractor shall adjust the inlet casting to grade and this adjustment shall be considered incidental to the construction of the inlet.

2400.4.9 - Major Adjustment (Manhole)

Major adjustment for manholes will be measured and paid for in lineal feet per the change in elevation with a minimum of one (1) foot. This shall be full compensation for excavation, furnishing, installing, adjusting, backfilling, compacting, labor and incidentals necessary to perform the work.

2400.4.10 - Adjust Valve in Concrete Pavement

Adjusting Valve Boxes will be measured separately as units. Granular Backfill material required for backfilling will not be measured for payment, but will be considered as subsidiary to, and included as a part of, the item of work. Each valve or curb box assembly shall be measured for payment only once no matter how many adjustments have occurred on an

individual valve. The Contractor shall be compensated for Adjusting Valve Boxes on the per each basis at the contract bid price. This shall be full compensation for furnishing and installing; for excavation and backfill, and for furnishing all equipment, tools, labor and incidentals necessary to complete the work in accordance with the contract.

2400.4.11 - Pavement Ties and Dowel Bars

Pavement Ties and Dowel Bars shall be measured and paid for at the contract unit price per installed unit. This work shall only be paid for where new pavement abuts existing concrete and tie bars are drilled into the existing concrete. Tie bars and dowel bars incorporated in the new pavement and into the concrete curb and gutter shall be considered incidental to the cost of the concrete pavement and the Type A curb and gutter.

2400.4.12 - Concrete Steps

Concrete steps shall be measured by taking the summation of the areas of the treads and intermediate landings, computed by multiplying the width of the tread and intermediate landing by the length of the tread or intermediate landing. Approach sidewalk to the steps shall be measured and paid for as concrete sidewalk. When concrete steps are included in the contract as a bid item, payment at the contract unit price per square foot shall be full compensation for furnishing all materials, including concrete masonry, reinforcement and expansion joints; for all excavation and preparation of foundation, backfilling and disposal of surplus material; for placing, finishing, protecting and curing; and for all labor, tools, equipment, and incidentals necessary to complete the work and restore the site of the work. When construction of concrete steps is required and there is not a bid item for concrete steps, the steps shall be paid for at the contract unit bid price for six (6) inch concrete driveway plus an additional $9.00 per square foot. The construction of the steps shall conform to WSSHSC Section 602.3.3.

2400.4.13 – Integral/Knee Wall or Step Side Wall

When an integral/knee wall is required for the construction of the steps, the face area of the integral/knee wall shall be measured by taking the width of the integral/knee wall multiplied by the length. When a step sidewall is required for the construction of the steps the face area of the step sidewall greater than a normal set of steps shall be measured and paid for. This step side wall area to be measured and paid for is indicated on the concrete step diagram and has been cross-hatched for reference. The integral/knee wall or step side wall shall be measured and paid for on the square foot basis at the contract unit price per square foot of concrete steps as indicated in Section 2400.4.11.

2400.4.14 – Truncated Dome Detectable Warning Field

Truncated Dome Detectable Warning Field, shall be measured and paid for at the Contract unit price per each. This price bid per each for Truncated Dome Detectable Warning Field shall be payment in full for furnishing and installing the 2’ x 4’ truncated dome detectable warning field, furnishing all labor, tools, equipment and incidental necessary to complete the work. The concrete under the truncated dome detectable warning field shall be measured and paid for at the contract unit price per square foot for the thickness of concrete.

2400.5 - DETAILS

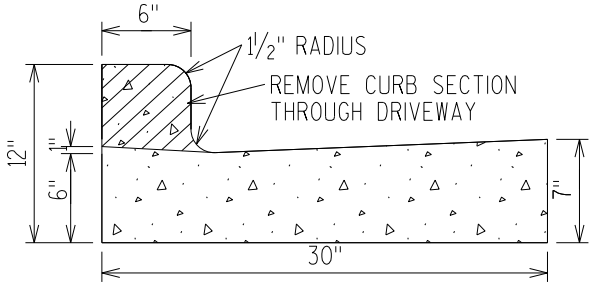

TYPE "D"

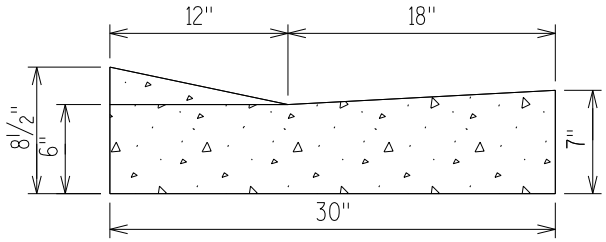

TYPE "V"

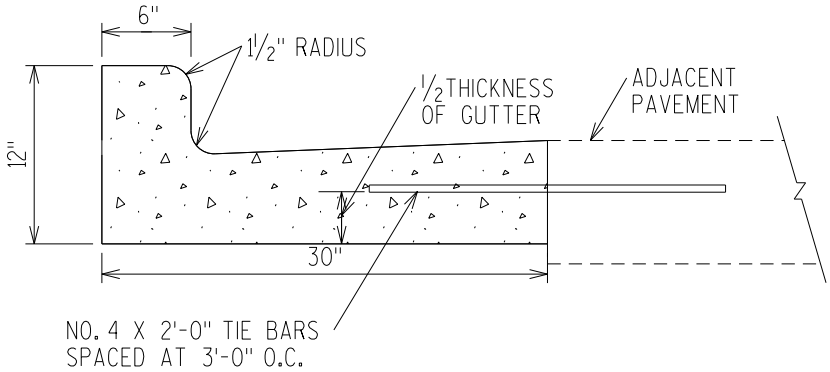

TYPE "A"

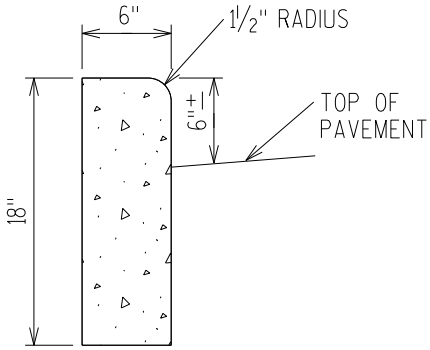

CONCRETE CURB

CURB AND GUTTER DETAIL

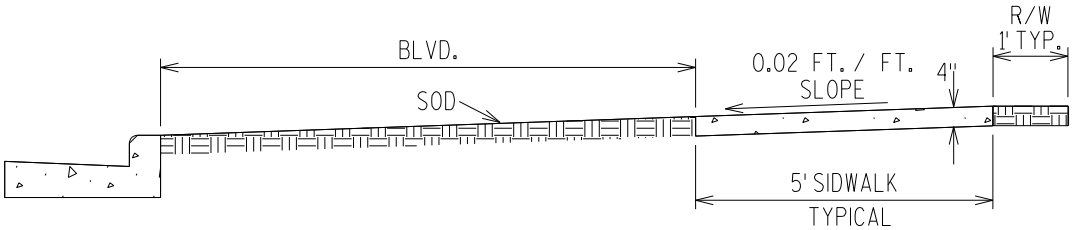

SIDEWALK DETAIL

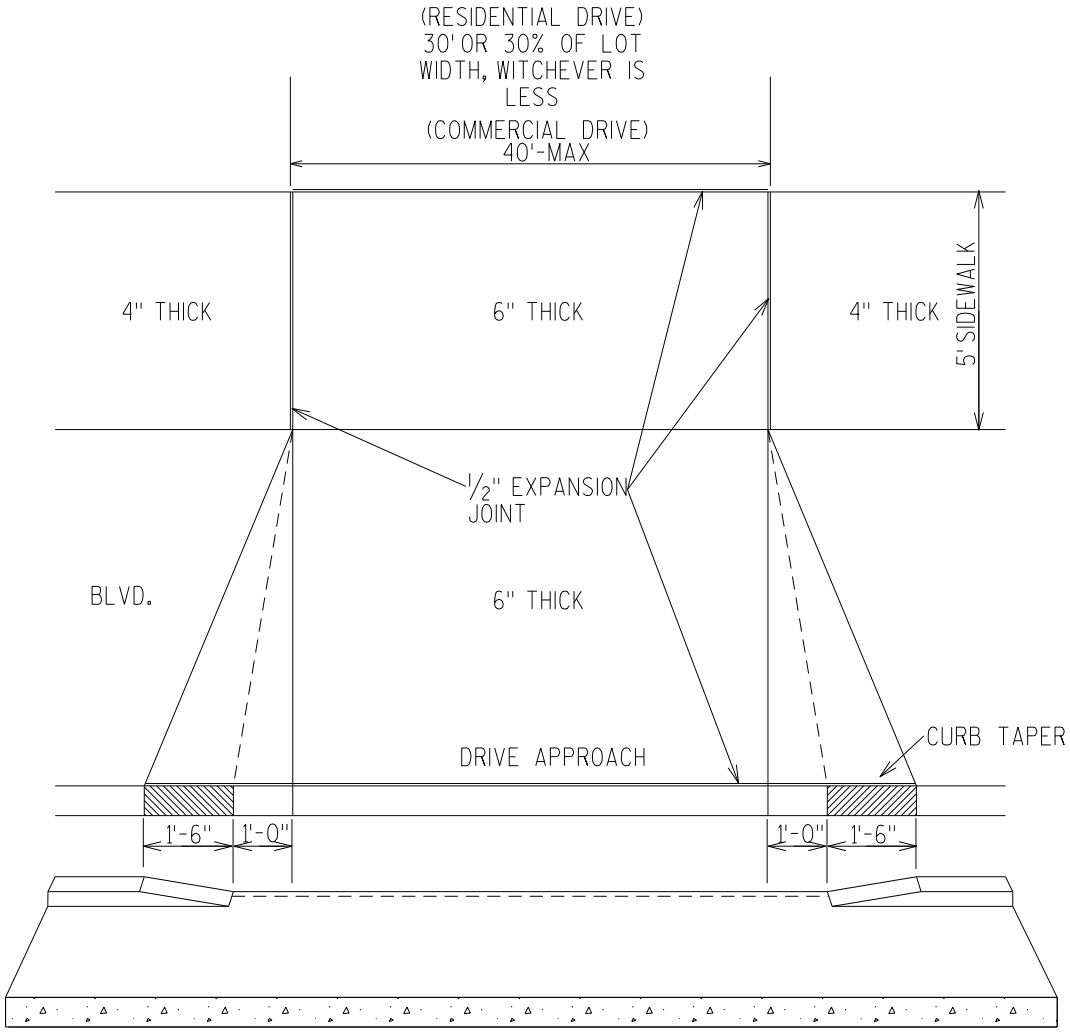

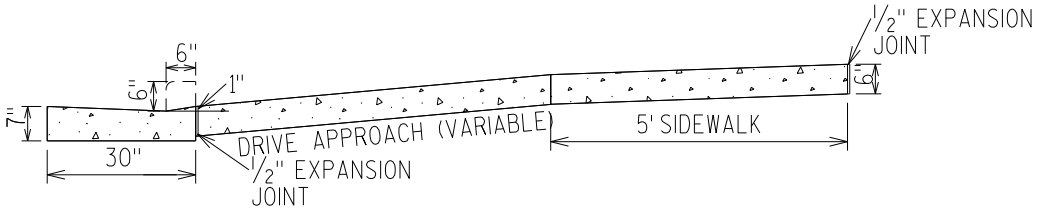

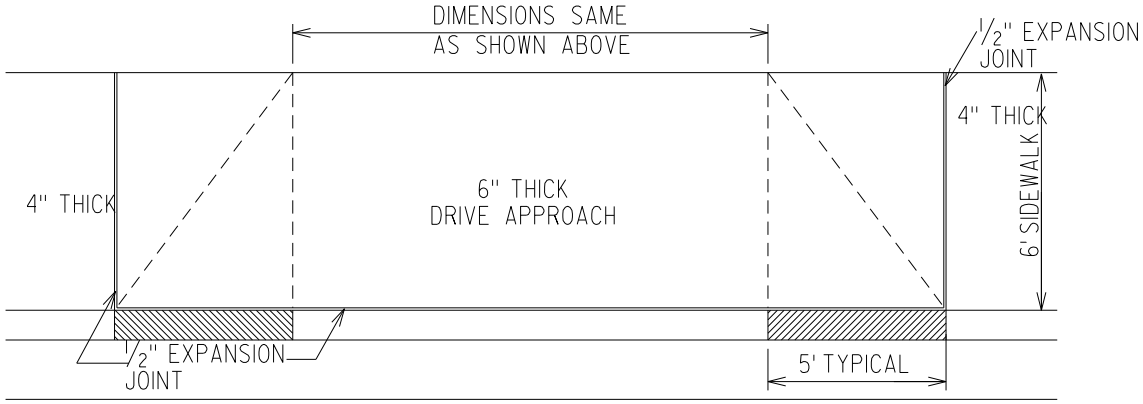

DRIVEWAY DETAIL

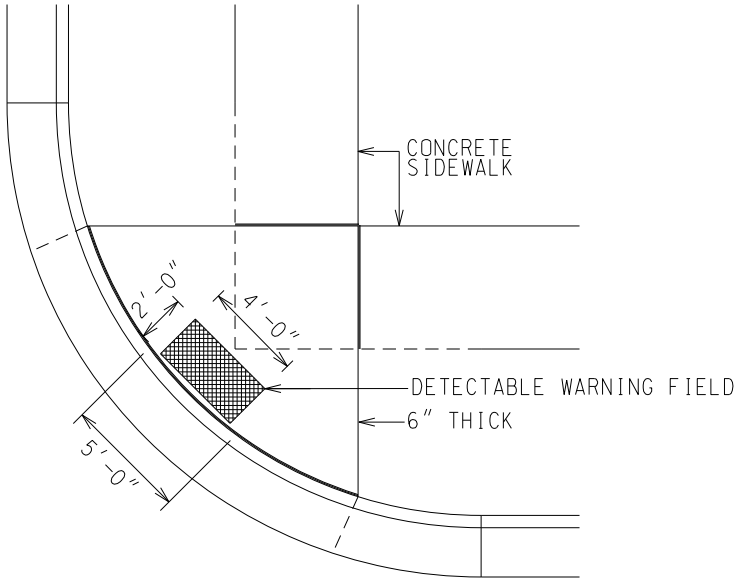

TYPE 1 RAMP
(CENTER OF RADIUS)

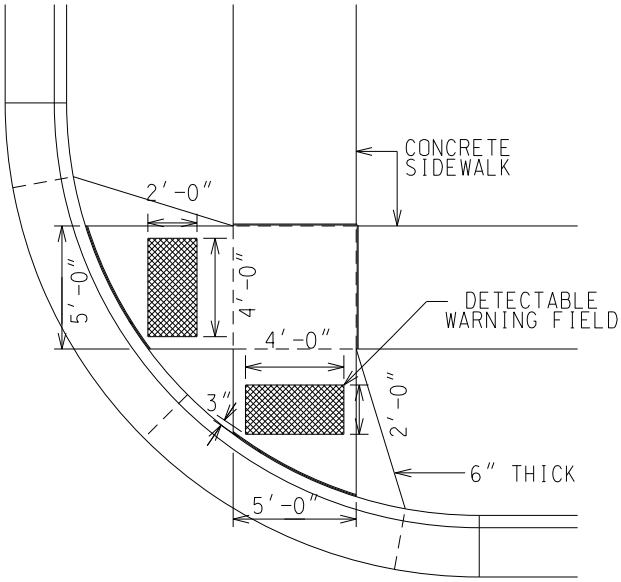

TYPE 2 RAMP
(IN LINE WITH SIDEWALK)

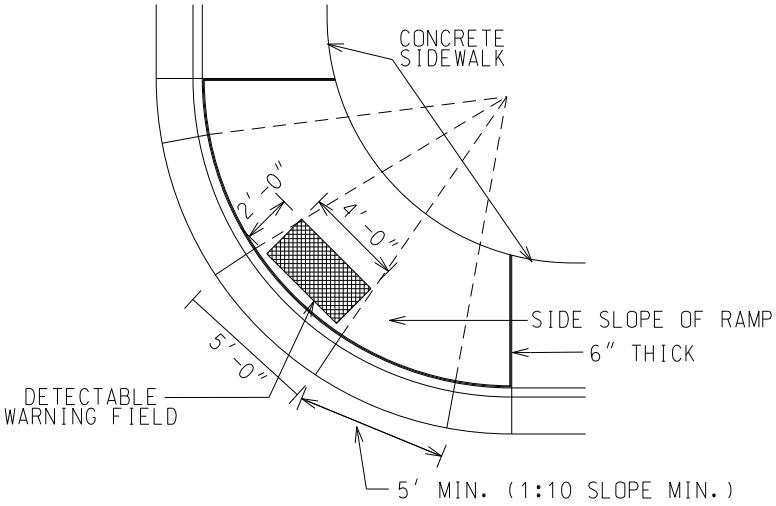

TYPE 3 RAMP
(NO BLVD.)

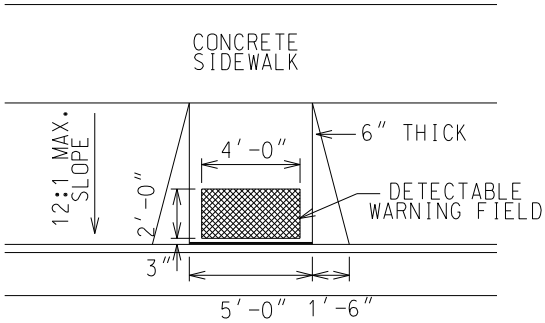

TYPE 4 RAMP
(OUTSIDE OF RADIUS)

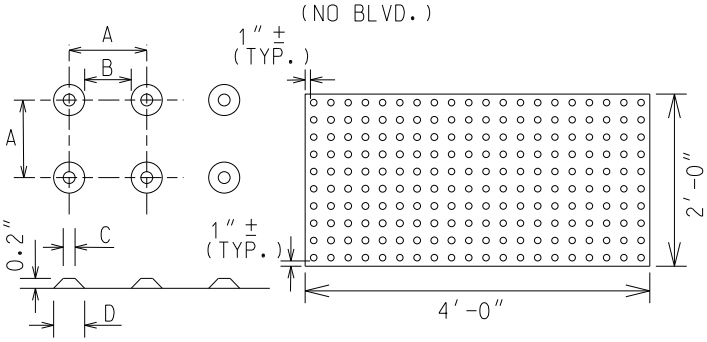

TRUNCATED DOMES
DETECTABLE WARNING
PATTERN DETAIL

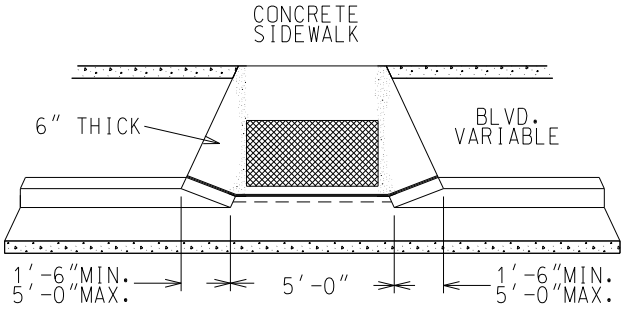

RAMP DETAIL

	MIN.	MAX.
A	1.6"	2.4"
B	0.65"	1.5"
C	*	*
D	0.9"	1.4"

*THE C DIMENSION IS 50% TO 65% OF THE D DIMENSION.

HANDICAPPED RAMPS

½" EXPANSION JOINT
CONTRACTION JOINT

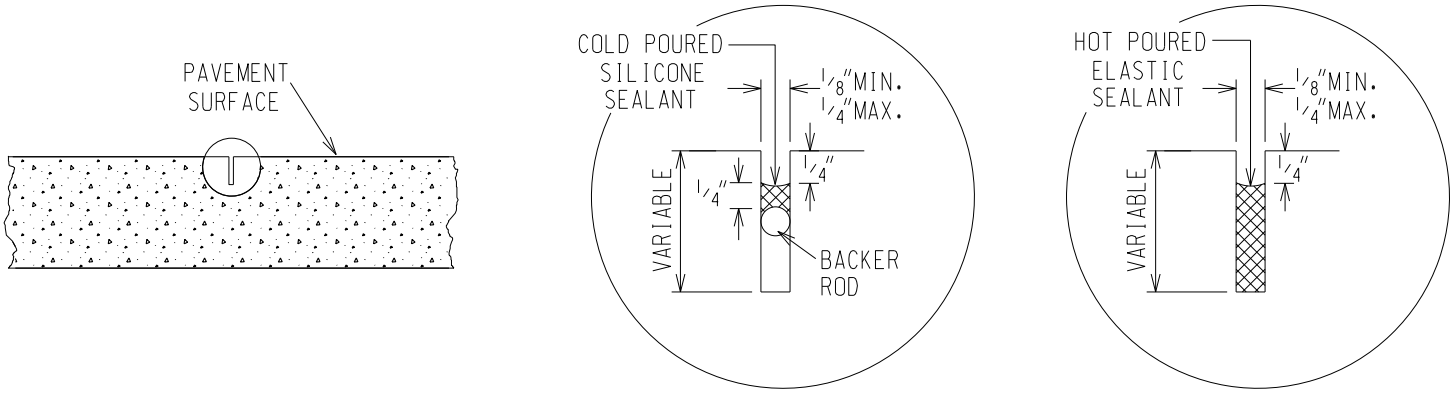

SAWED JOINT

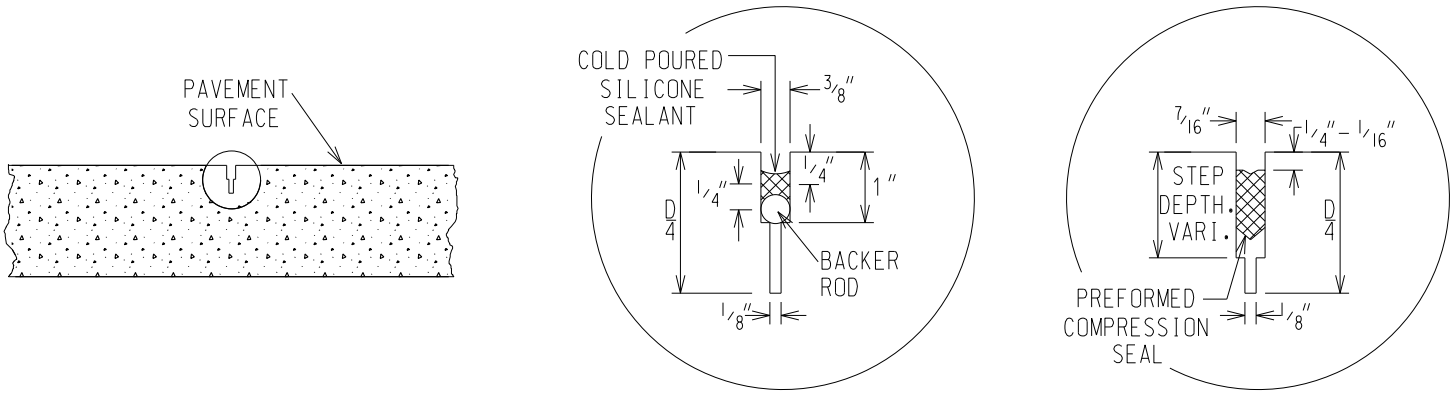

CONTRACTION JOINT

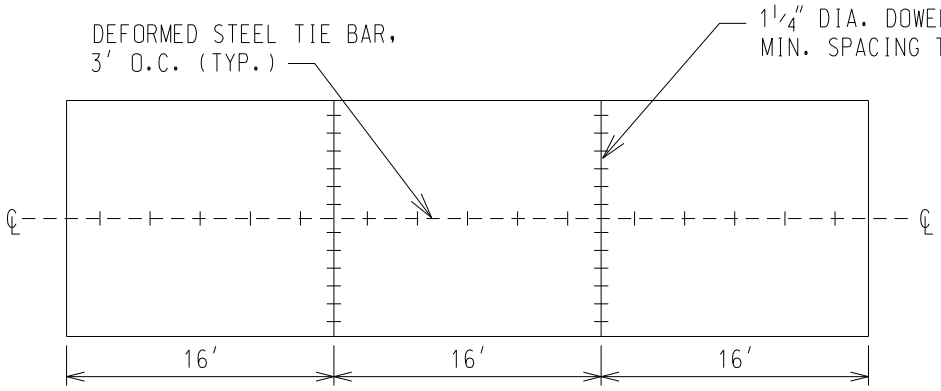

TYPICAL CONTRACTION JOINT LOCATIONS

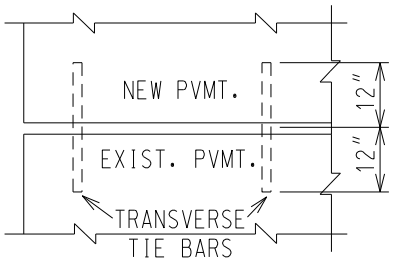

PLAN VIEW

NOTE: LOCATION AND DEPTHS OF JOINTS SHALL BE DETERMINED IN THE FIELD BY THE ENGINEER.TIE BARS AND DOWEL BARS SHALL BE EPOXY COATED.

CONCRETE PAVEMENT JOINTS

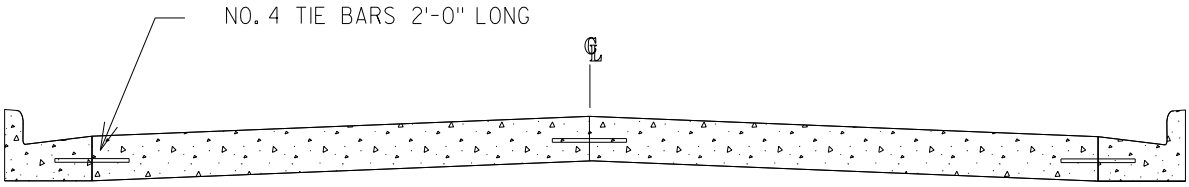

TYPICAL TIE BAR LOCATION UNLESS OTHERWISE DIRECTED BY THE ENGINEER.

DEFORMED STEEL TIE BAR DETAIL

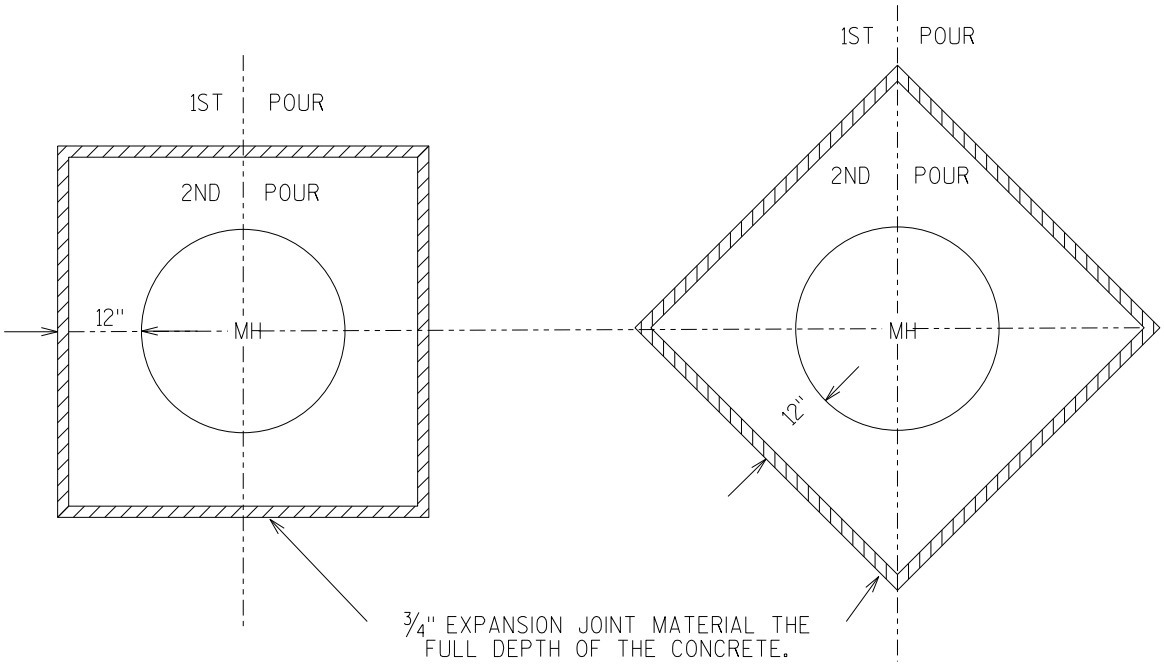

NOTE: BOXOUTS SHALL BE SHAPED AND FRAMED BEFORE CONSTRUCTION.
DIRECTION AND ALIGNMENT TO BE DETERMINED IN THE FIELD BY THE ENGINEER.

CONCRETE PAVEMENT BOXOUT

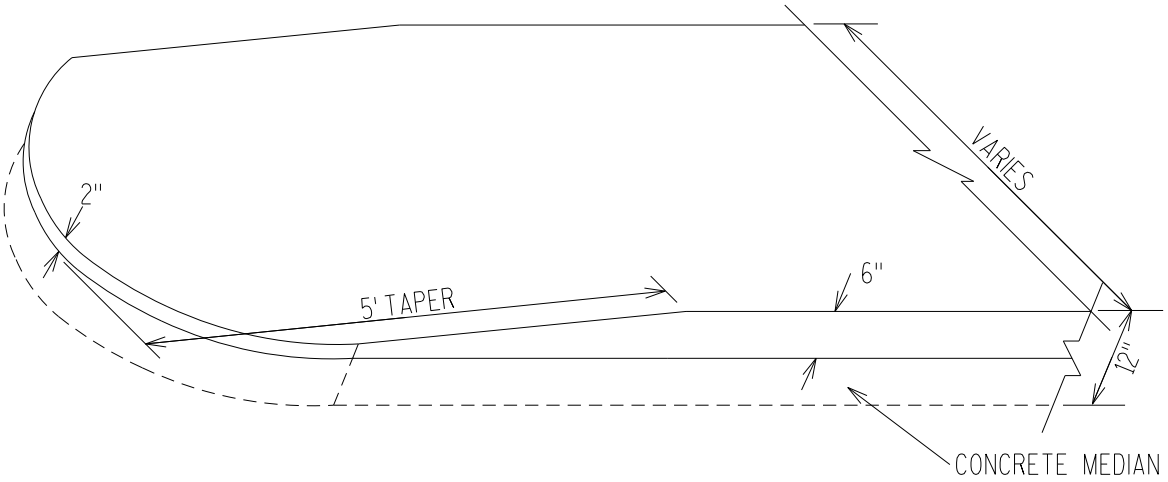

NOTE: CUT CONTRACTION JOINTS AT 5' LONGITUDINAL SPACINGS.

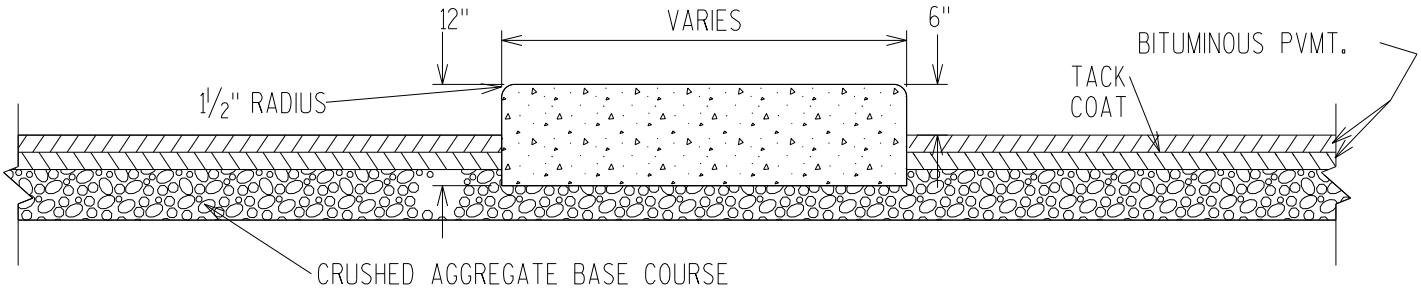

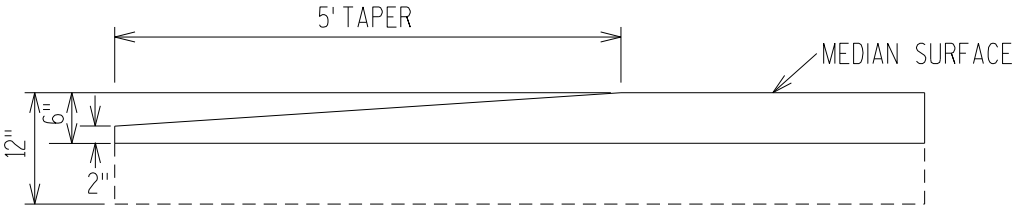

DEPRESSED MEDIAN NOSE
(WITHOUT CURB AND GUTTER)

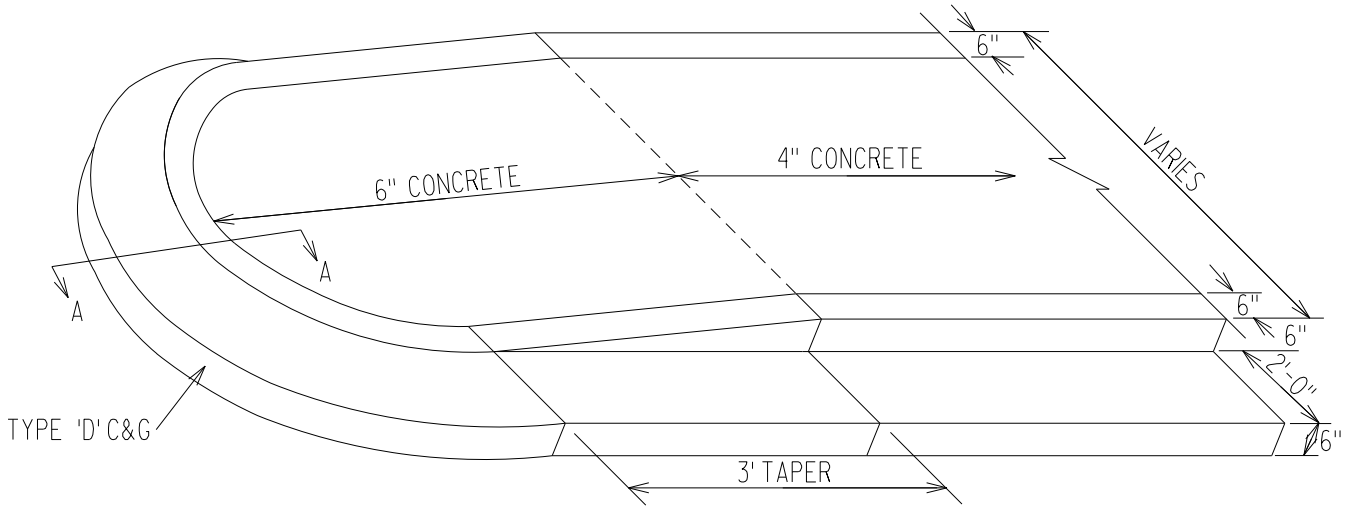

NOTE: CUT CONTRACTION JOINTS AT 5' LONGITUDINAL SPACINGS.

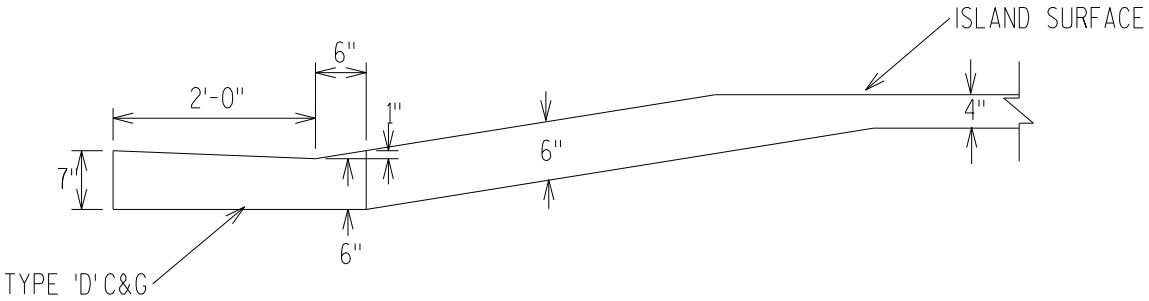

SECTION A-A

DEPRESSED MEDIAN NOSE
(WITH CURB AND GUTTER)

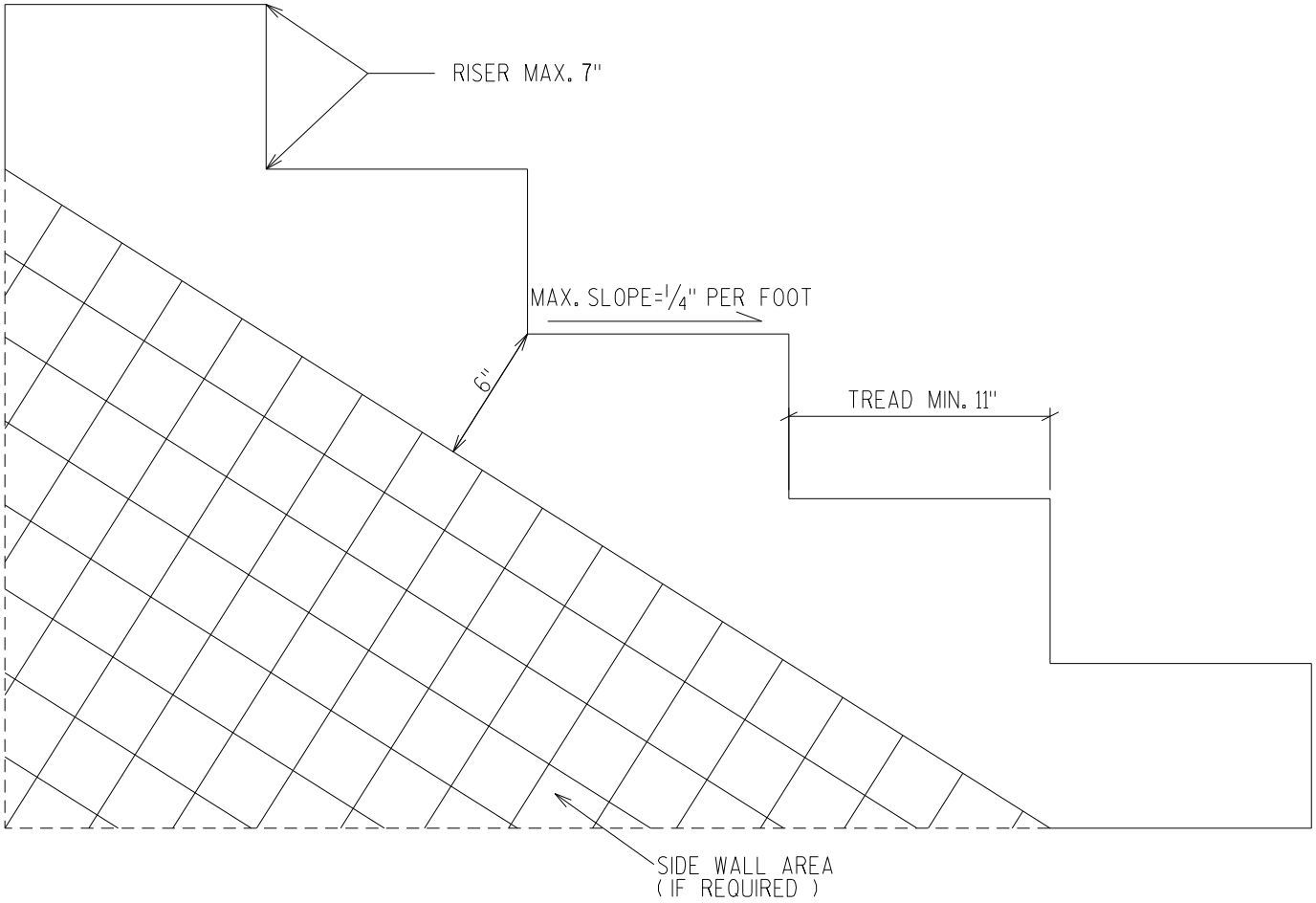

NOTE: 1. ALL TREADS AND RISERS IN ANY ONE FLIGHT SHALL BE OF UNIFORM DIMENSIONS.

2. LONGITUDINAL REINFORCEMENT SHALL BE AS DIRECTED BY THE ENGINEER.

3. APPEARANCE OF FINISHED PRODUCT SHALL MATCH EXISTING, OR AS DIRECTED BY THE ENGINEER.

- - - - CONCRETE SIDES EXTENDED AS REQUIRED OR DIRECTED BY ENGINEER

CONCRETE STEPS

CITY OF ALTOONA

S P E C I F I C A T I O N S

DIVISION 2500 - ASPHALTIC PAVING

2500.1 - DESCRIPTION

2500.1.1 General

Work in this section shall consist of constructing asphaltic surfaces of the required design and dimension, as shown on the Plans and Details as provided by the contract. The labor, materials, and equipment provided by the Contractor shall be of the quality, quantity, and condition necessary to complete the work in a **top quality manner.**

All work in this division shall conform to the requirements of comparable sections of the WSSHSC including Sections 450, 455 and 460 except as modified within this specification.

2500.2 - MATERIALS

2500.2.1 - General

All materials used shall meet or exceed the requirements for aggregates and asphaltic materials intended for use in base, binder, and surface course mixtures, tack and seal coats, and surface treatments of the appropriate sections of the WSSHSC.

2500.2.2 - Asphaltic Pavement

The asphaltic material for paving purposes shall be asphalt cement, Type E-1 or Type E-0.3, with a penetration grade PG58-28 unless otherwise specified. The bitumen content of the mix shall be no less than 5.8 percent.

Prior to beginning any work, the Contractor must supply an asphaltic pavement job mixture design for approval by the Engineer.

2500.2.3 - Tack Coat

Grade SS-1 asphalt emulsion shall be used for tack purposes, and shall conform to Section 455 of the WSSHSC.

2500.2.4 - Mortar

Mortar to be used for adjusting manhole castings and rings shall be a preblended air-entrained underground utility mortar mix manufactured by SPEC MIX or approved equal which meets the requirements for mortar of ASTM Designation C-270.

2500.2.5 – Flexible Joint Sealant

Flexible joint sealant shall conform to AASHTO Specification M-198, Kent-Seal or approved equal may be used, and shall be 3 1/2” x 3/8” for adjusting rings.

2500.3 - METHODS

2500.3.1 - Saw Cut Pavement

Where new asphaltic surfacing operations meet existing asphaltic pavement, the existing surface shall be saw cut to provide a butt-joint for the full depth of the existing asphaltic. The Contractor shall protect the saw cut edge until the new surface is constructed. Damages as a result of negligence shall be the Contractor's responsibility.

2500.3.2 - Tack Coat

Prior to placing new asphaltic surfaces, an emulsified asphalt tack coat will be applied to existing surfaces as directed by the Engineer. Asphaltic paving shall not be placed until the tack coat has cured to the point where it is tacky to the touch. Emulsified asphalt shall be diluted; one part emulsified asphalt, one part water and shall be applied at a **uniform** rate of 0.10 gallons of diluted emulsified asphalt per square yard. All the sawed joints shall be tacked prior to placing the abutting pavement.

2500.3.3 - Paving and Surfacing

2500.3.3.1 - General

Asphaltic paving operations shall be performed in one or more courses as required by the Plans, Details, and Specifications, or as directed by the Engineer in order to achieve a finish product of adequate stability with a **top quality** appearance.

2500.3.3.2 - Base Condition

Asphaltic mixture shall be laid only on a prepared, firm and compacted base, foundation course or existing pavement, which is substantially surface-dry and free of loose and

foreign material. Asphaltic mixture shall not be placed over frozen subgrade or base or where the roadbed underlying the foundation or base is temporarily unstable from the effects of frost heaving.

2500.3.3.3 - Paving in Adverse Weather Conditions

Asphaltic mixture shall not be placed during rain or snow. Any mixture that has been adversely affected by rain or snow prior to final rolling will be subject to rejection.

2500.3.3.4 - Cold Weather Paving

Asphaltic mixture shall not be placed during the calendar period between October 15 and May 1, except with written approval or order of the Engineer. Asphaltic mixture shall not be placed when the air temperature in the shade and away from the effects of artificial heat, is less than 35° F., except when approved by the Engineer in writing. The fact that the Engineer does grant such approval shall not be construed as substantiating an extension of contract time for the completion of the work.

When placing of asphaltic mixtures is continued after October 15 with the Engineer's approval or order, either at the request of the Contractor or in order to complete the work to the stage required by the provisions of the contract, the asphaltic paving work so performed will be construed to have been done at the Contractor's risk and final inspection thereof will be deferred until May of the succeeding year. Prior to final acceptance of pavement, the Contractor shall repair, restore or replace at his own cost and expense and in a manner approved by the Engineer all damage or defects in the asphaltic pavement or surfacing which, in the judgement of the Engineer, are attributable to temperature and weather conditions which prevailed after October 15.

When placing of asphaltic mixtures is continued after October 15 by order of the Engineer for the convenience of the City, the final inspection and acceptance will be accomplished upon completion of such placement.

2500.3.3.5 - Rejected Asphalt Mix

Asphaltic mixture that, in the judgement of the Engineer, is not sufficiently mixed or is defective in any manner will be rejected.

2500.3.3.6 - Surface Variations

The asphaltic surface shall show no variation greater than 1/4 inch from the resting edge of the straight edge between any two contacts with the surface. In addition, joints shall be fully consolidated showing no gaps or irregularities or variations in surface elevations.

2500.3.3.7 - Pavement Joints

2500.3.3.7.1 - Longitudinal Joints

The longitudinal joints shall be made by overlapping the screed onto the previously laid material for a minimum of at least one inch, depositing a sufficient amount of materials. A maximum distance of 12 inches shall be permitted between the location of the joints between the different courses. The centerline joint shall remain in the center of the street and overlapping of the joint will not be permitted.

2500.3.3.7.2 - Transverse Joints

Transverse joints shall be constructed with the proper use of separation paper, and shall be at near right angles to the street.

2500.3.3.8 - Finish Paving Near Manholes and Structures

Contact surfaces, manholes, valves, and similar structures shall be sufficiently coated with liquid asphalt and cleaned to prevent accumulation of asphaltic material. The finish asphaltic surface around these structures shall be one-eighth (1/8) to one-quarter (1/4) inch above the edges of the structure.

2500.3.4 - Compaction

2500.3.4.1 - General

Compaction shall be accomplished by the Ordinary Compaction Procedure or by the Specified Density Procedure as hereinafter provided. All rolling shall be accomplished during daylight unless artificial light, satisfactory to the Engineer, is provided.

2500.3.4.2 - Hot Rolling

After the spreading and strike-off and while still hot, the course shall be compacted thoroughly and uniformly by rolling. The asphaltic mixtures shall receive an initial rolling as soon as practicable after being spread, and rolling shall be substantially completed before the mat has cooled to a temperature of 180° F. Where initial rolling causes undue displacement, hair-cracking or checking, the time of rolling will be adjusted by the Contractor to mitigate those conditions or as directed by the Engineer.

2500.3.4.3 - Roller Speeds

Vibratory rollers shall not be operated in the dynamic or vibratory mode at speeds in excess of 1-1/2 miles per hour or 220 feet per minute.

2500.3.4.4 - Rolling Patterns

Each roller, while the work is under way, shall be kept as nearly as practicable in continuous operation, and the speed shall at all times be slow enough to avoid undue displacement of the mixture. The lead roll or drum shall be driven during the initial or breakdown pass. Unless otherwise directed, rolling shall begin at the sides and proceed longitudinally parallel to the road centerline, each trip overlapping the previous trip and progressing to the crown of the road.

The entire surface shall be rolled until 95% of the maximum laboratory density is achieved and until roller marks are eliminated. Any scuffing or displacement occurring as a result of turning or reversing of the roller, or from any other cause, shall be corrected at once and the rolling procedure revised to eliminate such damage. To prevent adhesion of the mixture to the roller, the wheels shall be kept properly moistened, but excess water will not be permitted. Care shall be exercised in rolling so as not to disturb the line and grade elevation of edges of the asphaltic surfacing.

2500.3.5 - Asphaltic Driveway Restoration

The Contractor shall be responsible for restoration of all asphaltic driveways to their original condition. The existing asphalt surface shall be sawcut straight and at near right angles to the work. Limits of the sawcut will be designated by the Engineer and shall be paid for as Sawing on the lineal foot basis. Marking of the final limits of driveway removal and sawcutting will be marked by the Engineer after the concrete work has been completed. The existing asphalt shall be removed and paid for as Remove Bituminous Surface on the square yard basis. The

excess gravel shall be removed and disposed of as Unclassified Excavation. The preparation of the driveway shall be paid for as Preparation of Base Course on the square yard basis.

A typical section of a restored driveway shall consist of a 2-inch asphaltic concrete pavement placed on a 6-inch crushed aggregate base unless otherwise directed by the Engineer. These items shall be paid for as Asphaltic Concrete Pavement on the per ton basis and Crushed Aggregate Base Course on the cubic yard or ton basis.

2500.3.6 - Adjustment of Manholes

2500.3.6.1 - General

Manhole castings shall not be set to finished grade until just prior to the placing of the surface course of asphaltic paving. If the asphaltic paving is placed in more than one lift, the initial lifts shall be placed before the manhole castings are placed on the manholes.

2500.3.6.2 - Removal of Manhole Castings

Prior to the beginning of any excavation or grading on a street, the Contractor shall remove all manhole castings from the manholes and cover the manhole opening with a steel plate suitable to support traffic.

2500.3.6.3 - Inspection of Existing Manhole Castings

The Owner shall inspect the removed castings, and if they are unsuitable to be reused, the Owner shall furnish new casting assemblies and remove the old castings from the site.

2500.3.6.4 - Removal of Asphalt to Reset Castings

Holes are then cut in the asphaltic base to adjust the manhole castings. The holes shall be cut square with a jackhammer and shall be no larger than necessary to compact around the casting.

2500.3.6.5 - Setting Adjusting Rings and Manhole Castings

Where the height of required adjusting rings is greater than 4-inches, the inlet shall be adjusted using a combination of concrete adjusting rings. Multiple concrete adjusting rings will not be allowed where one concrete adjusting ring is sufficient. The minimum thickness of a concrete adjusting ring shall be 3-inches. Concrete adjusting rings 2-inches or less in thickness will not be allowed.

Concrete adjusting rings shall be set in a full bed of mortar to the required elevation. A minimum thickness of 1/2-inch of mortar shall be placed and maintained between the adjusting rings and the manhole masonry and between all adjusting rings. Inlet castings shall be laid on a full bed of mortar or on a 3 ½” x 3/8” bed of flexible joint sealant.

The manhole casting shall be set 1/8 inch below the finished concrete curb and gutter.

2500.3.6.6 - Notification

The Contractor shall notify the Engineer 24-hours in advance of the adjusting of all manhole castings. After the Contractor has arrived at the project site to adjust manhole castings, the Contractor shall again notify the Engineer. No manhole casting shall be adjusted without the Engineer present. If a manhole has been adjusted without the Engineer present, the Contractor shall remove the manhole casting and rings and reset the rings and manhole casting in the presence of the Engineer.

2500.3.6.7 - Maximum Number of Adjusting Rings

The maximum total amount of casting adjustment using concrete adjustment rings shall be twelve (12) inches. If, during the adjustment of the casting to the final grade, the total amount of adjustment rings exceeds twelve (12) inches, the Contractor shall do a major adjustment in accordance with Section 2500.3.6.8.

2500.3.6.8 - Major Manhole Adjustment

The major adjustment shall be the installation of the manhole riser section to match the change in elevation of the finished casting grade. For manhole casting elevations, which are too high, the Contractor shall remove the existing riser section and replace it with a new riser of the proper size. For manhole casting elevations that exceed the allowable amount of adjustment rings, the Contractor shall remove the excess amount of rings and insert a new riser section of the proper size.

2500.3.6.9 - Adjusting Manholes for Interim Paving

On street projects that have not been paved or require the placement of the additional layers of asphaltic concrete pavement, the Contractor shall adjust all the manhole castings to the existing street grade prior to the end of the construction season. The manhole castings shall be backfilled and paved prior to end of the construction season. No additional compensation shall be made for adjusting the manhole castings to the existing street grade.

2500.3.7 - Adjust Valve

2500.3.7.1 - General

Valve boxes shall not be set to finished grade until just prior to the placing of the surface course of asphaltic paving.

2500.3.7.2 - Inspection of Existing Boxes

All water valve boxes shall be inspected by the City of Altoona prior to construction to determine condition. During this inspection, if any valve box assemblies or sections are found to be in need of replacement, the City will have its own contractor replace the valve box assemblies or sections in need of replacement.

2500.3.7.3 - Damaged Boxes

Any valve box assembly or section damaged during construction shall be replaced in kind by the Contractor using materials approved by the Engineer. The repairing of the damaged valve box assembly of section shall be at the Contractor's expense.

2500.3.7.4 - Adjusting Valve Boxes to Finished Grade

The valve box shall be adjusted 1/4 inch to 3/8 inch below the finished asphaltic surface. After the casting is set to grade, the valve box shall be compacted with granular backfill. The Contractor shall have personnel available to adjust valve boxes that have been incorrectly set or moved during the paving operation to within the tolerances described above.

2500.3.7.5 - Adjusting Valve Boxes for Interim Paving

On street projects that have not been paved or require the placement of the additional layers of asphaltic concrete pavement, the Contractor shall adjust all the valve boxes to the existing street grade prior to the end of the construction season. The valve boxes shall be backfilled and paved prior to end of the construction season. No additional compensation shall be made for adjusting the valve boxes to the existing street grade.

2500.3.8 - Equipment

2500.3.8.1 - General

Asphaltic pavers shall be self-contained, power-propelled units, provided with an activated screed or activated strike-off assembly, heated if necessary, and capable of spreading and finishing courses of asphaltic plant mix material in lane width applicable to the specified typical section and thickness shown on the plans.

2500.3.8.2 - Hopper and Feed Controls

The paver shall be equipped with a receiving hopper of such size, shape and capacity as to permit the unloading of trucks without loss or spillage of the mixture and with a minimum of delay. The paver shall be equipped with automatic feed controls, properly adjusted to maintain a uniform depth of material ahead of the screed.

2500.3.8.3 – Power

The paver shall have sufficient power and traction to operate efficiently on grades.

2500.3.8.4 - Screed

The screed or strike-off assembly shall produce a finished surface of the required evenness and texture without tearing, shoving or gouging the mixture. The screed shall be adjustable as to the required crown and cross section of the finished pavement. Extension of the screed by the use of one or more static screed extensions totaling more than 12 inches at either screed end will not be permitted.

2500.3.8.5 - Automatic Control System

Except when used for paving entrances, approaches, intersection connections, and other small irregular areas, the paver shall be equipped with an approved automatic control system capable of automatically controlling the elevation and slope of the screed, unless the Engineer determines that the use of such automatic controls is impracticable. Both the grade and slope controls shall be in working order and **used** at all times when the equipment is required.

In the event of a breakdown of the automatic control system during paving operations, the paver may continue to operate under manual control for only the remainder of the working day in which the automatic control system broke down.

2500.3.9 - Traffic

The Contractor shall be responsible for all traffic control devices including flagmen, barricades, and signing which is necessary for the safe routing of vehicle and pedestrian traffic during the paving operations.

2500.3.10 - Site Clean-Up

The Contractor shall leave the project area in a clean, neat, and presentable condition prior to exiting the area, including the clean-up of excess asphaltic materials.

2500.3.11 - Paving Width

The paving of street sections shall be paved in two (2) equal passes unless otherwise approved by the Engineer. The Contractor shall have equipment capable of spreading and finishing the courses of asphaltic concrete pavement to the lane width specified.

2500.3.12 - Notice of Paving

The Contractor shall notify the City of Altoona forty-eight (48) hours in advance of the paving of a street.

2500.4 - MEASUREMENT AND PAYMENT

2500.4.1 - Tack Coat

Measurement and payment of the amount of tack coat asphalt emulsion shall be by the volume in gallons after dilution as recorded by the Engineer. This shall be full compensation for furnishing, hauling, dilution, water, applying, protection of the area, and all labor, tools, equipment and incidentals necessary to complete the work. Separate payment will not be made for asphaltic materials for plant mixes, and shall be included in the measurement and payment for Asphaltic Concrete Pavement.

2500.4.2 - Asphaltic Concrete Pavement

The item of asphaltic concrete pavement shall be paid for at the contract unit price per ton for the type of Asphaltic Concrete Pavement placed and shall be full compensation for furnishing, preparing, hauling, mixing, and placing of all materials; for compacting mixtures, and for all labor, tools, equipment and incidentals, including maintenance necessary to complete the work.

2500.4.3 - Adjust Manhole Casting in Asphaltic Pavement

2500.4.3.1 - Existing Manhole Casting

If an existing manhole casting (one **not** installed or reset under this contract) requires an adjustment to the proposed grade, the Contractor shall adjust the casting to the proper grade and be compensated. The Contractor shall be compensated for adjusting the existing manhole casting at the contract unit price for casting adjustment on the per each basis. This shall be full compensation for furnishing all required materials; for removing, reinstalling and adjusting the castings; and for all labor, tools, equipment, and incidentals necessary for adjusting each casting.

2500.4.3.2 - Manhole Castings on Streets with Multiple Lifts of Asphalt

On streets where more than one (1) lift of asphaltic pavement shall be placed, the Contractor shall adjust all manhole casting just prior to the placement of the final lift of asphaltic pavement. The Contractor shall be compensated for adjusting the manhole casting at the contract unit price for casting adjustment on the per each basis. This shall be full compensation for furnishing all required material; for removing, reinstalling and adjusting the castings; and for all labor, tools, equipment, and incidentals necessary for adjusting each casting.

2500.4.3.3 - Manhole Castings on Oiled or Single Layer of Asphalt Streets

On streets where the final street project shall be an oiled surface or with only one (1) lift of asphaltic pavement is to be constructed, all manhole or inlet castings constructed under this contract shall be adjusted to finish grade after the crushed aggregate base course is placed. No compensation shall be made for adjusting manholes or inlets installed under this contract.

2400.4.4 - Major Adjustment (Manhole)

Major adjustment for manholes will be measured and paid for in lineal feet per the change in elevation with a minimum of one (1) foot. This shall be full compensation for excavation, furnishing, installing, adjusting, backfilling, compacting, labor and incidentals necessary to perform the work.

2500.4.5 - Adjust Valve

Adjusting Valve Boxes will be measured separately as units. Granular Backfill material required for backfilling will not be measured for payment, but will be considered as subsidiary to, and included as a part of, the item of work. Each valve or curb box assembly shall be measured for payments only once no matter how many adjustments have occurred on an individual valve. The Contractor shall be compensated for Adjusting Valve Boxes on the per each basis at the contract bid price. This shall be full compensation for furnishing and installing;

for excavation and backfill, and for furnishing all equipment, tools, labor and incidentals necessary to complete the work in accordance with the contract.

CITY OF ALTOONA

S P E C I F I C A T I O N S

DIVISION 2600 - WATER MAIN

2600.1 - DESCRIPTION

2600.1.1 - General

Work in this section shall consist of the installation of water main, including fire hydrants, valves, services, connections, excavations, backfilling and testing, as shown on the Plans and Details as provided by the contract.

The labor, materials, and equipment provided by the Contractor shall be of the quality, quantity, and condition necessary to complete the work in a **top quality manner**.

2600.2 - MATERIALS

2600.2.1 - General

All materials furnished by the Contractor shall conform to the requirements of this section.

All materials delivered to the job site for use in the construction of water main must pass a field inspection before installation. The Contractor shall allow the Engineer adequate time for the inspection of materials. All materials found to be defective shall be rejected by the Engineer and shall be removed from the site immediately. No compensation shall be paid for delays caused by the inspection, whether or not the materials are accepted.

All water main materials, if delivered to the job site prior to construction, shall be stored in an approved storage area, and shall be immediately covered with a protective tarp. The materials shall remain under the tarp until the day of construction, when they may be distributed for installation. Any materials, which are not installed that day, shall be replaced under the protective tarp.

All water main pipe, fittings, valves, hydrants, and accessories shall be handled with lifting hoists or skidded in order to avoid shock or damage. Under no circumstances shall such materials be dropped or skidded along other pipe. Materials, if stored, shall be kept safe from damage. The interiors of all pipe, fittings, and other appurtenances shall be kept free from dirt or foreign matter at all times. All appurtenances made of brass shall be lead free.

2600.2.2 - Bedding

Native materials meeting the bedding requirements may be used for the installation of the water main. All water main shall be bedded in sand, crushed stone or pea gravel meeting the following requirements:

2600.2.2.1 - Crushed Stone

Crushed stone shall be made from crushing sound limestone, dolomite ledge rock, or other rock materials, which is hard, tough and durable. The crushing process shall produce material of which 85% to 100% of the particle shall have at least one machine fractured face.

GRADING REQUIREMENTS FOR 3/8 INCH CRUSHED STONE	
Sieve Sizes	**Percentage Passing By Weight**
1/2 Inch	100%
3/8 Inch	90-100
No. 8	0-15
No. 30	0-3

2600.2.2.2 - Bedding Sand

Bedding sand shall consist of durable particles ranging in size from fine to coarse in a substantially uniform combination. Unwashed bank-run sand, rejected concrete sand, and crushed bank-run gravel shall be considered generally acceptable under this specification. The presence of approximately 6% of fine clay or loam particles is desirable, but clay or loam lumps are not permitted. The maximum moisture content shall be 10%. Bedding sand shall conform substantially to the following gradation requirements:

GRADING REQUIREMENTS FOR BEDDING SAND	
Sieve Sizes	**Percentage Passing By Weight**
1 Inch	100%
No. 16	45-80
Material Finer Than No. 200	5-8

2600.2.3 - Backfill Material

2600.2.3.1 - Excavated Material

Excavated material may be used as backfill if it is suitable material in the judgment of the Engineer.

2600.2.3.2 - Granular Backfill

Granular material for backfilling shall consist of durable particles ranging from fine to coarse in a substantially uniform combination. Some fine clay or loam particles are desirable, but they shall not be present in the form of lumps. Granular backfill shall conform to the following gradation requirements:

GRADING REQUIREMENTS FOR GRANULAR BACKFILL	
Sieve Sizes	**Percentage Passing By Weight**
2 Inch	95-100%
No. 4	35-60
Finer Than No. 200	5-8

2600.2.3.2 - Cover Material

Material, which is to be used around and over the water pipe and above the pipe bedding, shall be termed cover material. It shall consist of durable particles ranging in size from fine to coarse in a substantially uniform combination. Unwashed bank-run sand, and crushed

bank-run gravel shall be considered generally acceptable under this specification. This material shall conform substantially to the following gradation requirements:

GRADING REQUIREMENTS FOR COVER MATERIAL	
Sieve Sizes	**Percentage Passing By Weight**
1 Inch	100%
3/4 Inch	85-100
3/8 Inch	50-80
No. 4	35-65
No. 40	15-30
No. 200	5-15

2600.2.4 - Water Main

2600.2.4.1 - Requirements

Pipe shall conform to A.W.W.A C-151 or A.N.S.I. A21.51 for Ductile Iron Pipe, Class 52. All pipe shall be new, unused material unless allowed by the Special Provisions.

2600.2.4.2 - Description

Ductile iron pipe shall consist of pipe centrifugally cast in metal or sand-lined molds having bell and spigot ends designed for a rubber gasket push-on joint. Pipe wall shall be homogeneous from inside to outside and shall be completely free of laminations, blisters, or other imperfections. The pipe size and thickness or class shall be as specified in the Contract Documents.

2600.2.4.3 - Coating

Water main pipe shall have a cement mortar lining and internal and external bituminous coats in accordance with Section 51.8 if AWWA C-151. The bituminous coating shall be applied over the cement lining on the inside of the pipe and a bituminous seal coat shall be applied on the exterior of all pipe fittings. The coating shall be smooth, tough and tenacious and impervious to water without any tendency to scale off, and shall not be brittle.

2600.2.4.4 - Markings

Each pipe shall have the weight, class, or nominal thickness and casting period conspicuously painted on it. The manufacturer's mark, the year in which the pipe was produced, and the letters "D.I." or the word "DUCTILE" shall be cast or stamped on the pipe. All cast marks and required markings shall be on or near the bell. Improper or incomplete marking of pipe will cause for rejection of the pipe.

2600.2.4.5 - Conductivity Straps

All water pipe joints shall be provided with devices to assure electrical conductivity across the joints. These joints shall be equal to Clow Cable Bond or U.S. Pipe Company Electro-Bond conductivity strips. Metal wedges or lead-tipped gaskets will not be permitted.

2600.2.4.6 - Gaskets

Unless otherwise specified, all rubber gaskets shall conform to A.W.W.A. C-111 or A.N.S.I. 21.11 for Rubber Gasket Joints for Cast Iron and Ductile Iron Pressure Pipe and Fittings.

2600.2.5 - Fittings

All water pipe fittings shall be cast iron or ductile iron conforming to the requirements of AWWA C-153 with conductive devices as specified for ductile iron pipe. All water main fittings shall have a cement mortar lining in accordance with the requirements of AWWA C-104. Fittings shall be furnished with a working pressure of 150 PSI.

2600.2.6 - Valve Boxes

Valve boxes shall be made of cast iron conforming to ASTM Designation A-48, Class 20. The castings shall be free from blowholes, porosity, hard spots, shrinkage defects or cracks, or other injurious defects and shall have a normal smooth casting finish. The castings shall be thoroughly coated with a 1-mil minimum thickness bituminous coating. Valve boxes shall be 5-1/4 inches in diameter.

Valve boxes shall be placed on a gate valve adapter manufactured by Adaptor, Inc. or approved equal.

Valve boxes shall consist of a base section, tubular mid and top sections, both with cast threads by which one can be telescoped on the other, extension sections if required, and a circular drop cover.

2600.2.7 - Fire Hydrants

2600.2.7.1 - Requirements

Fire hydrants shall be “traffic” model breakaway type with no flow separation, constructed of ductile iron and conform to AWWA Standard Specification C502-85 latest revision.

2600.2.7.2 - Specifications

(1) Main Valve:	Compression Type, 5-1/4 Inch Opening
(2) Direction to Open:	Counter-Clockwise
(3) Operating Nut:	1-1/2 Inch Pentagon
(4) Inlet Design:	6-Inch Mechanical Joint W/Retainer Gland
(5) Outlet Nozzle:	One 4-1/2 Inch Steamer Nozzle, Two 2-1/2 Inch Hose Nozzles
(6) Nozzle Caps:	National Standard Threads, 1-1/2 Inch Pentagon Nuts W/Chains
(7) Color:	Red
(8) Bury Depth:	8 Feet Minimum

2600.2.7.3 - Acceptable Hydrants

(1) Waterous WB 67

2600.2.7.4 - Standpipes

All hydrants shall have a 16-inch upper standpipe unless otherwise specified in the Special Provisions.

2600.2.8 - Valves

2600.2.8.1 - Requirements

All valves shall conform to AWWA C-500 for Gate Valves and C-509 for resilient Wedge Valves. All valves 12 inches in diameter and larger shall be rubber seated butterfly valves conforming to AWWA C-504 Class 150B. All valves shall be suitable for direct burial installation.

2600.2.8.2 - Gate Valve and Wedge Valves

All valves from up to 12-inches in diameter shall be gate valves or resilient wedge valves and shall have the following design features:

Test Plugs:	3/8-1/2 inch diameter threaded, solid, malleable or cast iron plug.
Stem Seal:	O-Ring, Buna N or NBR Rubber, Durometer Hardness of 70 + or - 5
Operating Nut:	2-Inch Square W/Directional Apron

2600.2.8.3 - Butterfly Valves

All valves12-inches in diameter or larger shall be rubber seated butterfly valves and shall have the following design features:

Class:	150B		
Body:	Gray or Ductile Iron		
Seals:	Self-adjusting Split-V or O-Ring		
Operators:	2 Inch Square Nut, Circular Valve Box Base W/Self-Draining, Self-Aligning Base, 4 3/4-5 Inch Diameter Concentric		
Torque:	Maximum input torque to develop the rated output torque shall not exceed 150 foot-pounds.		
Lubricant:	Grease or Oil W/Fill and Drain Plugs		
Protective Coating:	3-16 Inch Diameter	-	Standard
	16 Inch or Larger	-	Initial Coat - Standard Final Coat Min. 10 Mils Thick Koppers 50 or 505

All valves 30 inches and larger shall be furnished with a seat adjustable, removable, and replaceable from the interior of the pipeline. The seat shall be removable and replaceable without removing the body from the pipeline.

2800.2.8.4 - Markings

Markings shall be cast on the bonnet or body of each valve and shall show the manufacturer's name or mark, the year the valve casting was made, the size of the valve, and the designation of working water pressure - "200W" for 3- through 12- inch valves and "150W" for 16-inch and larger valves.

2600.2.9 - Corporation Stops

Corporation stops shall be manufactured in accordance with AWWA C-800 and ASTM B-62, from 1/2 inch to 2 inches, as indicated in the Contract Documents or ordered by the Engineer. Corporation stops shall be MUELLER 300 Ball Corporation Valve, model B-25008, or approved equal.

2600.2.10 - Curb Stops and Boxes

2600.2.10.1 - Curb Stops

Curb stops shall be manufactured in accordance with AWWA C-800 and ASTM B-62, from 1/2 inch to 2 inches as indicated in the Contract Documents or ordered by the Engineer. Threaded stainless steel by HDPE transition fittings shall be supplied for each curb stop.

Curb valves shall be inverted key, Minneapolis pattern, ball valve with compression fittings. They shall have an integral clamping device on the compression nut to lock the valve to the pipe and insure electrical continuity. Curb valves shall be MUELLER 300 Ball Curb Valve with MUELLER 110 Conductive Compression Connections model B-25155, or approved equal.

2600.2.10.2 - Curb Boxes

Curb boxes shall be of the "Minneapolis Pattern", made with cast iron conforming to A.S.T.M. Designation A-48, Class 20. The castings shall be free from blowholes, porosity, hard spots, shrinkage defects or cracks or other injurious defects and shall have a normal smooth casting finish. The pentagon head bolt shall be brass. The castings shall be thoroughly coated with a 1-mil thickness bituminous coating. The cover shall be manufactured by A.Y. MCDONALD Manufacturing Co., “TW” tracer wire style, or approved equal.

Cast iron curb boxes described herein consist of a base section with cast O.D. threads, a top section with cast I.D. threads, extension sections when required, and a cast cover retained by means of a bolt. The service box is to be installed over a curb stop to provide control access. The standard curb stop standpipe shall be 1 1/4 inch diameter with an adapter attached to accommodate the various size service valves. All service boxes shall have a length of 7 to 8 feet without extension sections.

2600.2.11 – Water Services

2600.2.11.1 - Requirements

Materials furnished for services shall be high density polyethylene (HDPE) tubing (CTS) and shall conform to A.S.T.M. D2737, D3035, and AWWA C901 with a minimum working pressure of 200 psi.

2600.2.11.2 - Markings

The name or trademark of the manufacturer, and a mark indicating the type shall be permanently and plainly marked on tubing at intervals not greater than 1 1/2 feet. The fittings shall be permanently and plainly marked with the name or trademark of the manufacturer.

2600.2.11.2 – Fittings and Joints

HDPE service pipe shall be connected to existing copper, galvanized pipe, or HDPE pipe with a mechanical compression coupling with stainless steel stiffener insert providing a seal and full pipe restraint. The coupling shall be MUELLER 110 Conductive Compression Connection model H-15403, or approved equal.

2600.2.11.3 – Tracer Wire

Tracer wire for water services shall be consistent with DIVISION 2800 – LOCATING WIRE FOR WATER AND SANITARY SEWER and as shown in the details.

2600.2.12 - Polystyrene Insulation

Polystyrene insulation shall be suitable for underground installation. It shall meet Fed. Spec. HH I 524C. It shall have a compressive strength of at least 40 PSI, minimum R-value of 5, and maximum water absorption of 0.17% by volume. It shall be provided in 4-foot by 8-foot sheets. Sheets shall be no less than 1-inch or greater than 2-inches in thickness.

2600.3 - METHODS

2600.3.1 - General

Water Main installation shall conform to ANSI/AWWA C600-87, Installation of Ductile-Iron Water Mains and their Appurtenances.

2600.3.2 - Operation of Water System

The City of Altoona Water Utility personnel will operate all water distribution system supply valves and hydrants. The Contractor shall make a request for a water shut-off to the Water Utility a minimum of 48 hours in advance. The Water Utility shall determine the time and duration of the shut-off. The Contractor shall continue the work to completion and restore service to the interrupted main. No claim for extra compensation shall be considered for overtime due to the hours of shut-off. The Contractor shall be responsible for the damages incurred by exceeding the duration of the shutoff. No additional compensation will be made for shuts scheduled outside of the Contractor's normal workday hours.

2600.3.3 - Abandonment and Salvage

2600.3.3.1 - Water Main

The Contractor shall abandon all water main and fixtures as shown on the Plans or as directed by the Engineer. The Contractor shall remove with reasonable care, any water main material as directed by the Engineer and shall store it on-site for salvage by the Owner.

2600.3.3.2 - Valves and Curb Stops

When valves or curb stops are to be abandoned, the Contractor shall remove the top section of the box and backfill and compact the remaining hole with the required backfill material.

2600.3.3.3 - Fire Hydrants

When a hydrant is to be removed from an abandoned water main, the Contractor shall remove the entire hydrant and bulkhead the open end of the remaining hydrant branch.

When a hydrant is to be removed where it is connected to a water main that will remain in service, the Contractor shall, in addition to the work described above, excavate to plug the hydrant tee or cross.

Hydrant drains connected to sewer manholes shall be bulkheaded inside the manholes.

2600.3.4 - Line and Grade

The Contractor shall, at his own expense, furnish and set the water main line and grade from the primary line and grade. Water main shall be placed with a minimum of 7 1/2 feet of cover, unless shown otherwise on the plans.

2600.3.5 - Excavation and Backfill

2600.3.5.1 - Trench Width

The Contractor shall be responsible to keep a safe trench width at all times. The maximum width of the trench excavation at the top of the pipe shall be the outside diameter of the pipe used plus 24 inches. This width may be increased to allow for stringers and sheathing when required. The Engineer reserves the right to limit the length of open trench at any time.

The Contractor shall be responsible to use sheathing or bracing as required by industry codes, as shown on the plans or as ordered by the Engineer to protect life, property or the work. Unless "Sheathing and Bracing" is included as a bid item, such work shall be considered incidental to the excavation.

2600.3.5.2 - Trench Excavation

Excavated material shall be placed in a manner that will not obstruct the work nor endanger the workers or the public, or obstruct sidewalks, driveways, roadways, or other structures. Placement of excavated material shall be done in compliance with federal, state, and local regulations.

If the bottom of the trench is of undesirable material, such as organic soil, etc. or there is presence of ground water which causes a condition which cannot adequately support the pipe, 3/4" washed stone shall be placed to stabilize the bedding area. The bedding material shall be placed up to the spring line of the pipe to a maximum of 1 foot on each side of the pipe.

2600.3.5.3 - Excavation in Rock

Rock excavation shall be defined to include all hard, solid rock in ledges, bedded deposits, unstratified masses, and all natural conglomerate deposits firmly cemented to present all the characteristics of solid rock. Rock excavation shall consist of all materials that cannot, in the Engineer's opinion, be excavated without drilling and blasting or without the use of rippers, together with boulders and other detached rock having a volume of one (1) cubic yard or more.

When rock is encountered, the Engineer shall be notified to measure or cross-section the area prior to its removal. Any rock, which is removed before the Engineer measures, it will not be allowed as payment.

The rock shall be excavated to a point six (6) inches below the outside of the barrel, and to a width, not to exceed the pipe diameter plus 24 inches. If blasting is required for removal of rock, it shall be done in strict accordance with The Wisconsin Administrative Code on Explosives and all local ordinances regulating blasting. The Contractor shall be held solely responsible for any damage to work performed by others or to adjacent property due to his blasting operation.

2600.3.5.4 - Ground Water or Dewatering

The Contractor shall keep all excavations free of water during and until completion of the work, as directed by the Engineer. The cost for making all extra excavations necessary to prevent the water from interfering with the proper construction work, bailing, pumping and dewatering shall be borne by the Contractor, and included in the prices bid for other items of work.

2600.3.5.5 - Trench Backfill

All trenches shall be backfilled with excavated material, which, in the judgment of the Engineer, is suitable for backfilling. Unstable backfill materials include vegetable or other organic matter, all types of refuse, large pieces or fragments of stone, concrete, bituminous concrete, and other material as in the judgment of the Engineer are unsuitable for backfilling. Frozen backfill material shall not be used.

If there is a deficiency of excavated material, the Contractor, upon written order of the Owner, shall furnish an additional quantity of granular backfill.

2600.3.5.6 - Compaction of Backfill Material

Backfill shall be consolidated by Mechanical Compaction. Mechanical compactors shall be used to achieve uniform consolidation of the material. The backfill material shall be placed in one-foot lifts and be compacted to a minimum of 95% modified proctor density. All required compaction testing shall be performed by the Owner at no cost to the Contractor. The Contractor shall fully cooperate and provide whatever assistance; time and safe access is necessary for the performance of the tests.

Special compaction methods around fittings, hydrants and other appurtenances shall be used to insure proper compaction.

2600.3.5.7 - Temporary Street Restoration

Where an open trench is cut in a traveled roadway, and the roadway is not immediately surfaced the Contractor shall supply temporary surfacing of six (6) inches of crushed aggregate which conforms to the requirements of Section 2300.

Backfilling and surfacing shall be included in the cost of water main. Such backfilling and surfacing requirements may not be shown on the plans.

2600.3.6 - Pipe Laying

2600.3.6.1 - General

Unless otherwise required, pipe shall be laid with the bell ends facing the direction of laying. When the grade exceeds two feet of rise per one hundred feet of trench, the bells shall face upgrade. For pipe intended to be straight, deviation in alignment in excess of one inch any joint is not acceptable.

The interior and exterior of all pipes shall be clean and free from all foreign material before being installed. The Contractor shall provide the necessary means to wipe, brush, swab or air blast to remove any foreign material from the interior of the pipe as directed by the Engineer. If, in the opinion of the Engineer, the water pipes are not sufficiently protected or clean, they shall be swabbed and cleaned as directed by the Engineer.

2600.3.6.2 - Bedding

After the trench has been excavated, a layer of bedding material shall be spread over the bottom of the trench at a minimum depth of four (4) inches. The pipe can be installed and jointed with a uniform support from the bedded material. The bedding material shall be brought up to a level even with the spring line of the pipe and carefully compacted as directed by the Engineer.

2600.3.6.3 - Cover

Cover material shall be placed after the pipe has been properly bedded and jointed. Placement of cover material shall be by hand or equally careful means, so as to avoid jarring or pushing the pipe and to assure that no large stones or foreign materials are allowed to come into contact with the pipe. Cover material shall extend approximately one foot above the top of the

pipe, and shall be carefully and uniformly compacted to 90% of the modified proctor density. Following the proper placement of the cover material the trench can be backfilled.

Where corrugated steel pipe is constructed, compaction around and 1-foot over the pipe must be compacted to at least 90% proctor, and backcasting will not be permitted until three (3) feet of cover has been placed over the pipe.

2600.3.6.4 - Pipe Protection

Every precaution shall be taken to prevent foreign material from entering the pipe while it is being placed in the line. At all times when pipe laying is not in progress, the open ends of pipe shall be closed by a watertight plug or other means approved by the Engineer. This provision shall apply during the noon hour as well as overnight. If water is in the trench, the seal shall remain in place until the trench is pumped completely dry. No pipe shall be laid in water or when in the opinion of the Engineer, trench conditions are unsuitable.

2600.3.6.5 - Handling of Pipe and Fittings

The Contractor shall have sufficient and adequate equipment on the site of the work for unloading and lowering pipe and fittings into the trench. Extreme care shall be exercised by the Contractor in handling all pipes, fittings and special castings so as to prevent breakage and coating damage. Any significant damage to coating shall be repaired before installation. Under no circumstances shall pipe or fittings be dropped into the trench or so handled as to receive hard blows or jolts.

2600.3.6.6 - Pipe Cutting

Pipe shall be cut at right angles to the centerline of the pipe. Cutting shall be done in a neat workmanlike manner. All pipes shall be cut with an approved mechanical cutter. The cut end of a pipe to be used with rubber gasket joints shall be tapered by grinding, and any sharp or rough edges shall be removed.

2600.3.6.7 - Offset Water Main

Whenever it becomes necessary to offset the main over, under, or around a known or unknown obstruction, the Contractor shall furnish and install the required fittings. The offsetting of the main and installation of these fittings shall be paid for at the unit price bid for fittings. Unless provided for in the Contract Document, no additional compensation shall be paid to the Contractor for any expenses incurred for offsetting of the main.

2600.3.7 - Water Main in Casing Pipe

Water main in casing pipe shall be positive restrained joint water main.

2600.3.8 - Restraining Water Main

2600.3.8.1 - Requirements

Mechanical joint retainer glands shall be used on all existing fittings and at all locations where restraining of the mains is required, and its vertical and horizontal bends, and final joints at water main dead ends as shown in the Standard Details. Blocking with concrete shall not be used unless approved by the Engineer.

2600.3.8.2 - Materials

In locations where new fittings are being placed for fire hydrant leads and vertical and horizontal bends, the water main shall be retained by one of the following methods:

(1) Push-On Restraining Gasket shall be Mega-Lug gasket or approved equal. Push on gaskets shall be used as follows:

(a) Gaskets shall never be reused.

(b) Gaskets shall not be used for electrical joint conductivity. Strapping of joint shall be required.

(c) Gaskets shall not be used with corroded pipe.

(d) Gaskets shall not be used in placement of plugs. Only mechanical plugs shall be allowed.

(e) Gaskets shall never be used with gray iron pipe or fittings.

(2) Retainer Glands shall be Mega Lug or approved equal.

2600.3.8.3 - Installation

The installation of approved pipe and fittings shall be in accordance with the manufacturer's specifications. All fittings retained with approved gaskets and retainer glands shall be approved for 250 psi operating pressures.

The Restrained Pipe Length Chart listed below indicates the length of restrained joint pipe to be installed at each fitting. The Contractor shall furnish the owner with a shop drawing showing all restrained fittings and the required lengths of restrained joint pipe.

RESTRAINED/TIED PIPE LENGTH CHART								
Minimum Length Requiring Restraint in Feet								
Fitting Type	**6-Inch**	**8-Inch**	**10-Inch**	**12-Inch**	**16-Inch**	**20-Inch**	**24-Inch**	**30-Inch**
11.25 DEGREE BEND	10	10	10	10	20	20	20	20
22.50 DEGREE BEND	10	10	10	10	20	20	40	40
30 DEGREE BEND	10	10	10	20	20	20	40	40
45 DEGREE BEND	10	10	10	20	40	40	40	60
60 DEGREE BEND	10	20	20	30	40	60	60	80
90 DEGREE BEND	20	20	30	40	60	80	80	120
TEE (SIDE TIED)	20	20	30	40	60	80	80	120
STUBS OR DEAD ENDS	20	20	30	40	60	80	80	120
CROSS WITH PLUGGED END	20	20	30	40	60	80	80	120
VALVES AT END OF LINE	20	20	30	40	60	80	80	120
The above lengths (given in feet) represent the minimum length of pipe to be tied together in each required direction from the fitting described.								

Restraints for 16-inch and larger water main and fittings shall be restrained joint pipe which shall consist of the manufacturer's standard joint system consisting of a push on joint restrained by a lock ring or bolted lock ring and a welded gland such as American Lok-Fast Joint Pipe, U.S. Lok Tight Joint, American Lock-Ring Joint, U.S. TR-Flex Joint, or approved equal.

2600.3.9 - Fire Hydrants

Fire hydrants shall be installed or relocated by the Contractor as shown on the plans or as directed by the Engineer. When placed behind the curb, the hydrant barrel shall be set so that no portion of the pumper or hose nozzle cap shall be less than twelve (12) inches nor more than eighteen (18) inches from the curb face. When set on the lawn, in the space between the curb and the sidewalk or between the sidewalk and the property line, no portion of the hydrant or nozzle cap shall be within six (6) inches of the sidewalk.

All hydrants shall stand plumb, and shall have their nozzles parallel with or at right angles to the curb, with the pumper nozzle facing the curb. The hydrant shall be placed on solid concrete brick or block. Hydrants shall be set to the established grade with nozzles a minimum of

sixteen (16) inches and a maximum of twenty-four (24) inches above the ground. Each hydrant shall be connected to the main with a six (6) inch ductile iron lead. One-half (1/2) cubic yard of washed gravel shall be placed under the hydrant base for drainage.

2600.3.10 - Valves

The Contractor shall install valves where indicated on the plans or as directed by the Engineer. Valve boxes shall be set over all valves as shown in the details unless vaults or special chambers are specified. Approved bedding material shall be tamped in place from a point above the main to a point 6 inches above the bottom of the valve box base to prevent the valve box or base from shifting.

Valve boxes and covers shall be centered over the valve operating nut and the entire box assembly secured in place before backfilling operations. Valve boxes that become shifted or filled during backfilling shall be entirely uncovered and reset.

2600.3.11 - Tapping of Water Main

Tapping of the water main as indicated on the plans or directed by the Engineer shall be completed by the Contractor. The Contractor shall notify the City a minimum of twenty-four (24) hours in advance.

2600.3.12 - Fittings

The Contractor shall furnish and install pipe and fittings as required to complete the job even if the fittings are not specifically listed on the plans. Fittings shall be installed where shown on the plans or as directed by the Engineer. If fittings are not labeled on the plans, the Contractor may install fittings or deflect the pipe joints according to manufacturer recommendations and with the approval of the Engineer. All fittings shall have restrained joints where required to balance the water pressure forces. The Contractor shall install the required length of restrained joint pipe on each side of the fitting as found in the Restrained Pipe Length Chart.

2600.3.13 - Vaults

Vaults shall be built where shown on the plans or as directed by the Engineer. All valves to be installed in vaults shall be installed in a standard vault as shown in the details.

When an air-release vault is required on the plans, it shall be as shown in the details and shall include the cost of furnishing and installing the air-release assembly.

2600.3.14 - Polystyrene Insulation

Water mains shall be insulated where noted on the plans and wherever the depth of cover is less than 6 feet. Prior to placement of these polystyrene boards, bedding material shall be placed to a height of 6 inches over the top of the pipe, leveled and compacted. The laying width shall be either four (4) feet or eight (8) feet as shown on the plan or as directed by the Engineer.

2600.4 - WATER SERVICES

2600.4.1 - General

All building sewers and water services shall be installed in accordance with the Wisconsin Administrative Code and all local plumbing codes and regulations. All water main taps for corporation stops shall be made under pressure. No water service shall be connected to a potable outlet until the water main has passed the bacteria-safe test.

2600.4.2 - Service Separation

Building services may be placed in a common trench if installed concurrently. If not installed concurrently, a minimum 8 foot horizontal separation must be maintained between the water service and building sewers. A minimum of 12 inches vertical and 18 inches horizontal shall separate the water service from a sanitary service.

2600.4.3 - Trench Backfill

All service trenches shall be backfilled with an approved backfill material, and shall be compacted in two-foot lifts to 95% of the modified proctor density.

2600.4.4 - Laying Services

2600.4.4.1 - General

Water services shall be a minimum size of 1 inch and shall be laid with 7 1/2 feet of cover.

2600.4.4.2 - New Water Services

All new water services shall be installed prior to the pressure test and tested as part of the distribution system. All new water service curb stops shall be located as shown on the Plans and Details or as directed by the Engineer, approximately 8 feet in from property line and shall

be left with an eleven-foot tail piece with a plugged end where no utility easement exists or with a tail piece that extends two (2) feet past the utility easement.

In new developments, the Contractor shall furnish and install a metal guard post adjacent to every new curb valve box. The post shall be a five-foot painted fence post with bottom spade. It shall be driven 18 to 24 inches into the ground adjacent to the curb box. It shall not be connected to the curb box in any way and shall be left in place. The cost of furnishing and placing the guard post shall be incidental to water service construction.

2600.4.4.3 - Reconnected Water Services

Following the pressure test and bacteria safe test, the Contractor shall tap the main and connect the new water services in as direct alignment as possible to the existing water services. Before the excavation is backfilled, all service connections shall be inspected for leaks and acceptability. The Contractor shall be responsible to leave all service connections exposed and contact the City for inspection.

The Contractor shall be responsible to locate the existing underground water services. The plans will supply the Contractor with the approximately locations as available to the Owner. If the initial excavation for the location of existing building sewers and water services fails to uncover the existing services, the Contractor, at his own expense, shall explore a distance of 6 feet in each direction, or a total of 12 feet, immediately in back of and parallel to the curb, or along the water main. If the existing building service or water service cannot be located within these limits and additional trenching is required, the Contractor shall be paid for an "Exploratory Excavation."

The Contractor shall disconnect existing water services where shown on the plans or as directed by the Engineer. Disconnect existing water service shall include excavation at the main and closing the existing corporation.

2600.4.4.4 - Bored Water Services

All pipes installed in bored or cased holes shall be provided with a minimum of two separate wraps of polyethylene. Care shall be exercised that mud or dissimilar materials that would cause corrosion of the pipe shall not come in contact with the pipe.

2600.4.4.5 - Insulating Water Services

Building water services shall be insulated wherever the depth of cover is less than 6 feet, or passes within 2 feet of an underground structure, which may experience freezing temperatures.

2600.4.4.6 - Exploratory Excavation

An exploratory excavation for the existing service will be required after the Contractor, at his own expense, has explored a distance of 6 feet in each direction of the initial excavation, or a total of 12 feet, immediately in back of and parallel to the curb, or along the water main. If the existing building sewers or water services cannot be located within these limits, and additional trenching is required, the Contractor shall be paid for an "Exploratory Excavation".

All exploratory excavations shall be made on the service near its connection to the main so as to minimize the loss of any concrete curb and gutter. Excavations or services which are separated by a distance of 5 feet or less shall be considered and paid for as one Exploratory Excavation regardless of the number of services located in that 5 foot length.

2600.5 - TESTING

2600.5.1 - General

All new water mains shall be tested and shall successfully pass the pressure/leak test, electrical conductivity test, and the bacteria safe test as described. All testing to be performed shall be under the supervision of the Engineer and the Water Utility. The Contractor shall request all testing a minimum of 24 hours in advance.

2600.5.2 - Flushing

Prior to performing any testing, the newly installed main shall be thoroughly flushed to remove all debris and foreign materials. Flushing shall be done by the Contractor upon notification of the Engineer, and shall be scheduled during periods of low demand. Flushing will take place as soon as possible following the installation of water main. Flushing shall be metered to record water loss.

The Contractor shall be responsible to supply all labor, materials, and equipment (including hoses) necessary to insure adequate drainage of the site during flushing, the cost of which shall be incidental to the installation of water main.

2600.5.3 - Pressure/Leak Test

2600.5.3.1 - Testing Method

The Contractor shall perform the pressure test under the supervision of the Engineer and the Water Utility. The Contractor shall request the test a minimum of 24 hours in advance.

The Contractor shall furnish all equipment and labor necessary to perform the pressure/leak test. The pressure/leak test shall be done prior to the bacteriological safe test.

The pressure/leak test shall be conducted after satisfactory installation of water main. The test section shall be subjected to approximately 150 pounds per square inch gauge pressure at the point of highest elevation of the main under test. Leakage shall not exceed the number of gallons per hour as determined by the following formula for rubber-sealed joints:

Allowable Leakage (GPH) = S x D x P / 133,200

in which S = Length of pipe to be tested (Feet)
D = Nominal diameter of pipe (Inches)
P = Square root of the test pressure
@ 150 PSI, P = 12.25

When hydrants are in the test section, the test shall be made against closed hydrant valves.

2600.5.3.2 - Failed Pressure/Leak Test

2600.5.3.2.1 - Identification of Leak

Should any test section fail to meet the leakage test, the Contractor shall immediately make the necessary repairs to the water main at his own expense. All visible leaks are to be repaired, regardless of the amount of leakage.

2600.5.3.2.2 - Valve Replacement Option

Should the pressure test fail when pressure testing against an existing valve the Contractor may replace the valve under the following conditions:

(1) The Contractor has investigated all possible sources of leaking. The Engineer shall then make the determination that the existing valve should be replaced.

(2) After the replacement of the valve, a pressure/leak test shall be completed and listed below will be the type of compensation that the Contractor shall receive:

(a) If the pressure/leak test fails after a new valve has been installed, the Contractor shall further investigate the possible source of the leak and make any necessary corrections. No compensation shall be made to the Contractor for removal and replacement of the existing valve and box if the existing valve was not the cause of the leak.

(b) If the pressure leak test passes after the replacement of the existing valve, the Contractor shall be compensated for the removal and replacement of the valve and box on a per each basis. Remove and Replace Valve and Box shall be measured and paid for per each for the size installed, and shall be full compensation for excavation, backfilling, furnishing, installing, labor and incidentals necessary to complete the work.

The Contractor will not be compensated for investigating for leakage at joints, fittings, or services even if the existing valve is faulty and is replaced.

2600.5.4 - Electrical Conductivity Test

2600.5.4.1 - General

The Contractor shall furnish all equipment, labor and miscellaneous items necessary to perform an electrical conductivity test on all water main installed under this Contract. The water main shall be tested for electrical continuity and current capacity. The electrical test shall be made while the main is at normal operating pressure.

2600.5.4.2 - Testing Methods

2600.5.4.2.1 - Direct Current

Direct current shall be impressed on the main between fire hydrants and the voltage increased until a current of 250 amperes is reached. This current shall be maintained for a period of five minutes. The resistance of the line can be determined by OHMS law. Before applying voltage to any main to which service laterals are connected, all electrical grounds shall be disconnected from the service laterals. Current flow through the pipe shall be measured continuously on a suitable ammeter and shall remain steady without interruption or excessive fluctuation for the five-minute test period.

Insufficient current, intermittent current, or arcing as indicated by large fluctuation of the ammeter needle shall be evidence of defective electrical contact in the main. The cause shall be isolated and corrected. The section of main in which the defective test occurred shall then be retested.

2600.5.4.2.2 - Voltage Resistance

A voltage, as required, shall be impressed on the main between fire hydrants. Resistance of the line shall be measured with an approved ohmmeter. A continuous and steady reading shall be maintained for a five-minute test period.

An insufficient ohmmeter reading shall be evidence of defective electrical contact in the main. The cause shall be isolated and corrected. The section of main in which the defective test occurred shall then be retested.

2600.5.5 - Bacteriological Safe Test

2600.5.5.1 - General

Water from all new mains must successfully pass a bacteriological test in accordance with the requirements of the Department of Natural Resources, and the City of Altoona Water Utility before the main is placed in service. The City shall supervise all water main operations.

The Contractor shall provide access to the main for chlorinating and sampling, as directed by the Engineer. The excavation shall be properly and securely braced and maintained until the successful testing, flushing, chlorinating, and sampling of the main is completed. The Contractor shall be held responsible for protecting any excavation required by means of proper barricades and lanterns during the above mentioned period.

2600.5.5.2 - Water Main Disinfection

Upon completion of a satisfactory pressure/leak test, the Contractor shall perform a disinfection procedure in accordance with AWWA C651-86, continuous feed method. The point of application of the chlorine shall be at the beginning of the new main near the supply source. The Contractor shall furnish a corporation stop at a location approved by the Engineer.

As part of the process, all new hydrants shall be thoroughly disinfected. Hydrants shall be fully opened and filled to the nozzle outlets with disinfectant. Upon completion of the continuous feed process, nozzle caps shall be replaced and the hydrant will remain full for 24 hours until sampling.

The Contractor shall prepare a solution of one (1) percent chlorine for application. The solution requires one (1) pound of high-test calcium hypochlorite (HTH) in eight (8) gallons of water. Water from the existing supply system or other approved supply source shall be made to flow at a constant rate into the new water main. In addition, chlorine shall be fed into the new

main at a constant rate. The dose of chlorine shall produce a mixture of not less than 25 mg/l free chlorine.

The following table shows the application of chlorine required for every 100 feet of pipe:

CHLORINE REQUIRED TO PRODUCE 25-MG/L CONCENTRATION IN 100 FT. OF PIPE BY DIAMETER		
Pipe Diameter Inches	100% Chlorine - Pound	1% Chlorine Solution Gal.
4	.013	.16
6	.030	.36
8	.054	.65
10	.085	1.02
12	.120	1.44
16	.217	2.60

2600.5.5.3 - Sampling

After an adequate period of time for the disinfection process, the Contractor shall flush the main of the disinfection chemicals. The Contractor shall be responsible for all costs associated with flushing activities, including labor, supply of hose for disposal means, etc. Upon proper notification of the City by the Contractor, the City will sample the water for bacteria. Samples shall be collected from each section of new main as well as each branch. In cases of extremely long mains, samples may be required to be collected along the length of line as well as at is end.

When necessary for sampling, the Contractor shall furnish a corporation stop and sufficient water service pipe for sampling at a location approved by the Engineer. Installation of this corporation stop and water service pipe shall be incidental to water main construction.

The water main shall be sampled daily until two consecutive samples pass the standard bacteriological test, at which time the Contractor shall be notified, and the main shall be put in service. The Water Utility will take all necessary samples of the water and provide any sampling supplies necessary to take these samples. The cost for sampling shall be submitted to

the Contractor, and the Contractor shall reimburse the City for such costs. The reimbursement of this cost shall be considered incidental to the unit price bid for water main.

2600.5.5.4 - Rechlorination

When unsatisfactory results are obtained, the Contractor shall be required to rechlorinate the main, as directed by the Engineer. When rechlorination is deemed necessary, it shall be done by the Contractor, at his expense, under the Owner's supervision.

2600.5.6 – Tracer Wire Testing

All tracer wire must pass a locating test, in the presence of the Engineer, prior to acceptance of respective pipe installation. All equipment necessary to perform the test shall be provided by the Contractor.

2600.6 - MEASUREMENT AND PAYMENT

2600.6.1 - Water Main

Water Main shall be paid for per lineal foot according to the diameter as measured along centerline of the pipe, center-to-center of junctions and fittings. This shall be full compensation for excavation, furnishing, installing, backfilling, compacting, testing, labor and incidentals necessary to complete the work. The restraining of fittings in accordance with 2600.3.8 shall be included in the price bid for push-on joint D.I. water main for the size specified.

2600.6.2 - Restrained Joint Water Main

Restrained joint water main when bid as an item shall be paid for per lineal foot according to the diameter as measured along centerline of the pipe, center-to-center of junctions and fittings. Water main in casing pipe shall be paid for as restrained joint water main for the size specified and shall be paid to the first joint beyond the end of the casing pipe. This shall be full compensation for excavation, furnishing, installing, backfilling, compacting, testing, labor and incidentals necessary to complete the work.

2600.6.3 - Hydrant Lead

Hydrant Lead shall be measured and paid for per lineal foot according to diameter and shall be full compensation for excavation, furnishing, installing, backfilling, compacting, labor and incidentals necessary to complete the work.

2600.6.4 - Fire Hydrants

Fire Hydrants shall be measured and paid per each unit installed and shall be full compensation for excavation, furnishing, installing, backfilling, compacting, labor and incidentals necessary to complete the work.

2600.6.5 - Remove and Relocate Hydrant

Remove and Relocate Hydrant shall be measured and paid per each and shall be full compensation for removing existing hydrant, resetting in another location, excavation, backfilling, compacting, labor and incidentals necessary to complete the work.

2600.6.6 - Remove and Salvage Hydrant

Remove and Salvage Hydrant shall be measured and paid per each and shall be full compensation for excavation, removing existing hydrant, salvage to Owner, abandonment, capping existing lead, backfilling, compacting, labor and incidentals necessary to complete the work.

2600.6.7 - Install Fire Hydrant from Salvage

Install Fire Hydrant from Salvage shall be measured and paid for per each and shall be full compensation for excavation, installation, backfilling, compacting, labor and incidentals necessary to complete the work.

2600.6.8 - Valve and Box

Valve and Box shall be measured and paid for per each for the size installed, and shall be full compensation for excavation, furnishing, installing, backfilling, compacting, labor and incidentals necessary to complete the work.

2600.6.9 - Tap and Corporation

Tap and Corporation shall be measured and paid per each for the size installed and shall be full compensation for excavation, furnishing, installing, backfilling, compacting, labor and incidentals necessary to complete the work.

2600.6.10 - Water Service

Water Service shall be measured and paid for per lineal foot of the diameter of service pipe installed. Measurement for payment shall be along a straight line from corporation

stop to existing service, except in locations where an obstruction exists requiring an indirect routing. This shall be full compensation for excavation, furnishing, including adapters, tracer wire, installing, backfilling, compaction, labor and incidentals necessary to complete the work.

2600.6.11 - Adjust Curb Box

Adjust Curb Box shall be included for payment on all existing curb boxes requiring adjustment and newly installed curb boxes located in the boulevard or other area which has been restored with topsoil and sod or other method requiring curb box adjustment after restoration. New water services to undeveloped lots that has been restored with seed shall be adjusted to finished grade with no compensation made for the adjusting of these curb boxes. Adjust Curb Box shall be measured and paid for per each and shall be full compensation for any efforts necessary to complete the work. Adjustment shall be paid only one time for any curb box.

2600.6.12 - Discontinue Existing Service

Discontinue Service shall be paid for per each and shall be full compensation for excavating, backfilling, compacting, labor and incidentals necessary to complete the work.

2600.6.13 - Exploratory Excavation

Payment for Exploratory Excavation shall be on a per each basis in the locations directed, and shall be full payment for excavating a safe and adequate inspection hole to uncover the questionable service, and for properly backfilling and compacting the hole after the Engineer has inspected the service.

2600.6.14 - Fittings

Fittings shall be measured and paid for on the per pound basis installed. Fitting pay weight shall be based upon the ductile iron compact fitting body weight (excluding weight of retainers, gaskets, straps, etc.) as found in McWane Incorporated, Pipe Economy, copyright 1991, pages 40 through 46. Copies of the reference book can be obtained from a Clow product representative.

2600.6.15 - Polystyrene Insulation Board

Polystyrene insulation board shall be measured and paid for on the per each basis as shown in the Bid Form. The unit of measurement shall be each 4' x 8' x 2" thick sheet. Payment shall be full compensation for furnishing and installing the insulation board as described.

2600.6.16 - Rock Excavation

Rock excavation shall be measured and paid for in accordance with WSSHSC Section 205.5.1 by the cubic yard. If the Proposal fails to include a bid item for Rock Excavation and material is uncovered that is so classified, excavation of the rock shall be paid separately at the Contract unit price for Unclassified Excavation plus $8.00 additional per cubic yard.

2600.6.17 - Crushed Stone Bedding Material

Payment for crushed stone bedding material shall be paid per cubic yard in place in the trench. Payment shall be limited to a width no greater than 1 foot beyond the pipe on each side, unless otherwise directed by the Engineer.

2600.7 – DETAILS

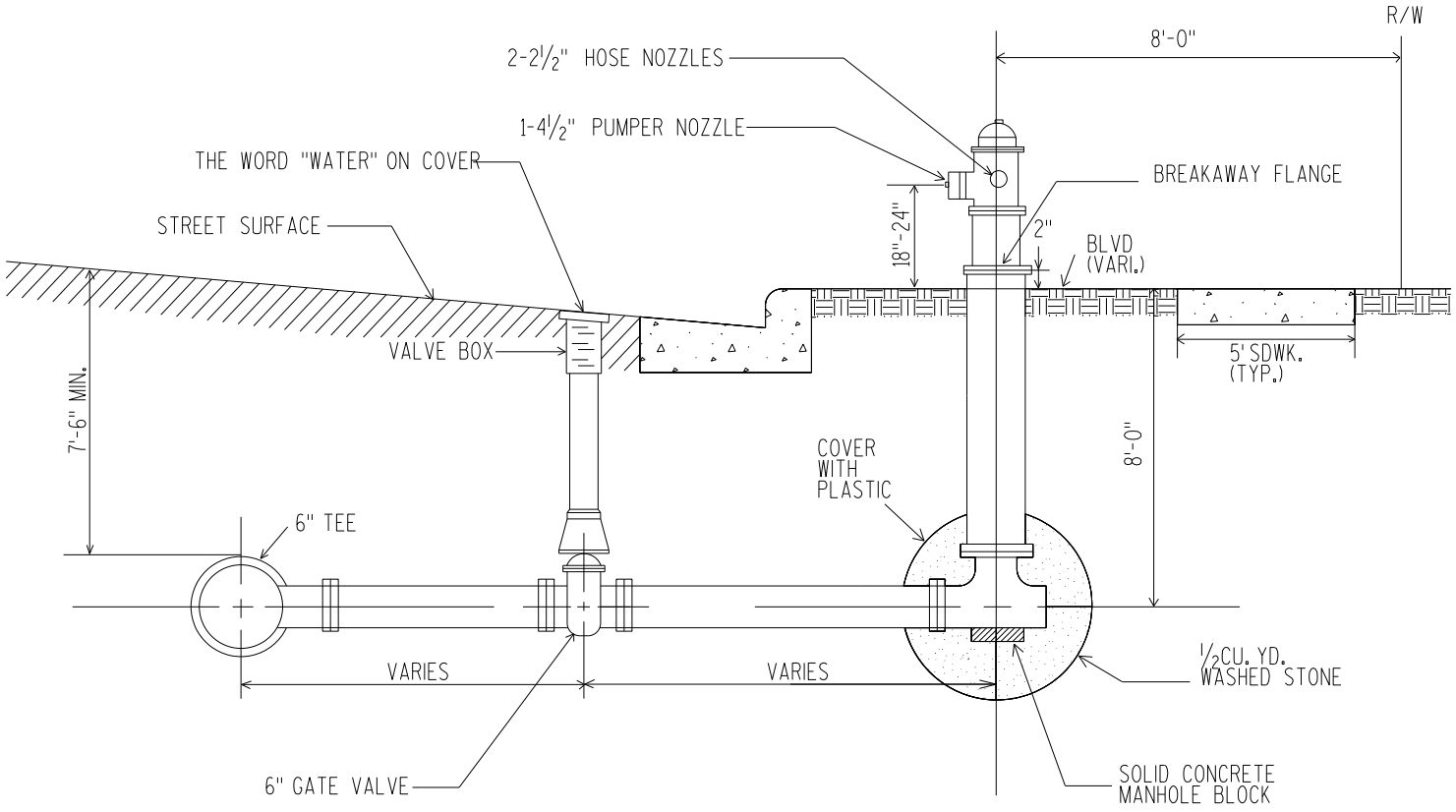

NOTE: ALL JOINTS REQUIRE MEGA LUG GASKETS UNLESS DIRECTED OTHERWISE BY THE ENGINEER.

STANDARD HYDRANT INSTALLATION

NOTE: SEE SANITARY SERVICE AND RISER DETAIL FOR TRACER WIRE AND BOX CONSTRUCTION

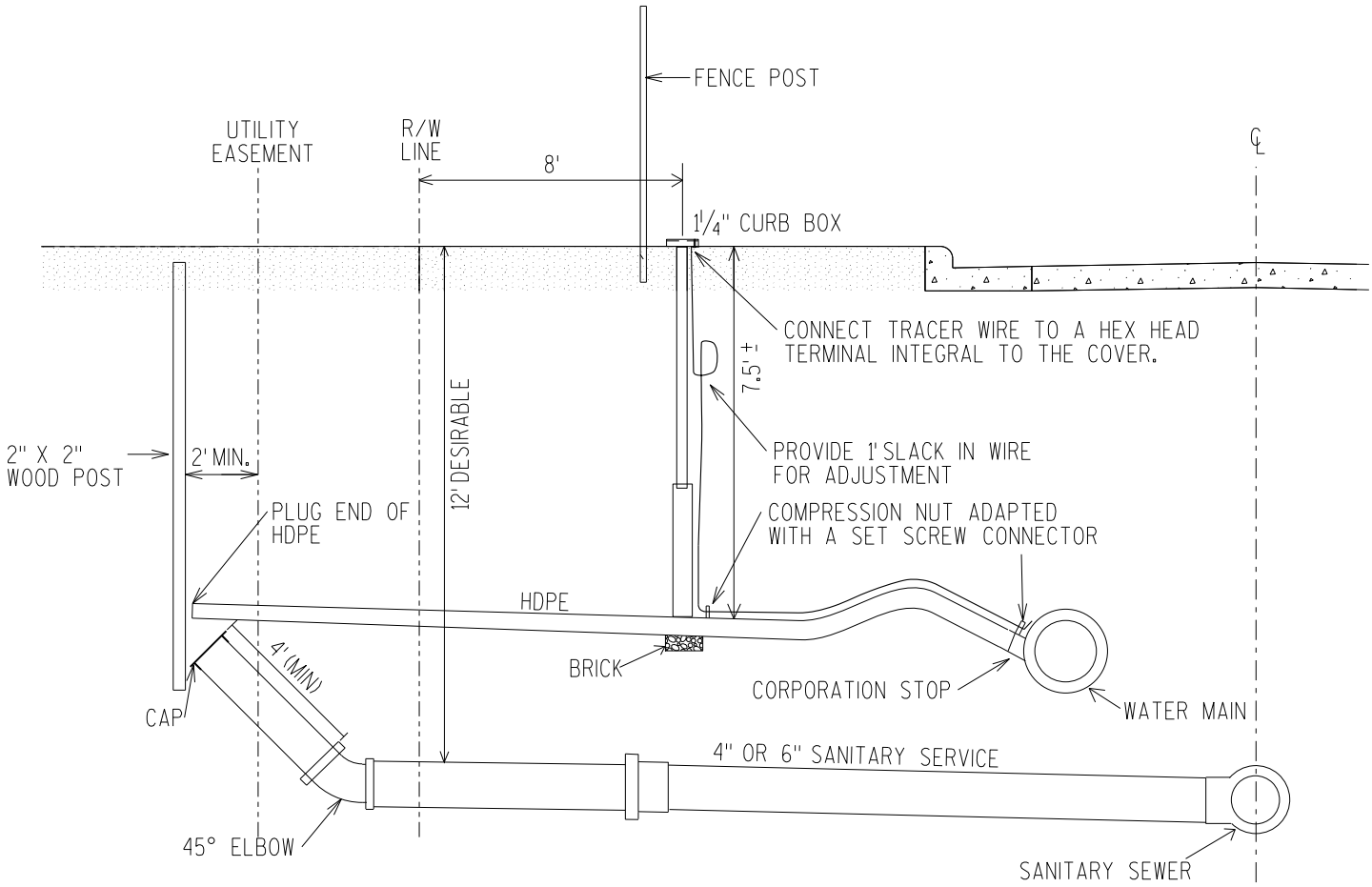

NOTE: TAP WATER MAIN ON 45° WITH PIPE.
SANITARY SERVICE TO BE INSTALLED AT A MINIMUM GRADE OF ¼" PER FOOT UNLESS OTHERWISE DIRECTED BY THE ENGINEER.
MINIMUM SEPARATION BETWEEN SERVICES SHALL BE 12" VERTICAL AND 18" HORIZONTAL.
SERVICES SHALL BE EXTENDED A MINIMUM OF 2' BEYOND THE UTILITY EASEMENT.

PROPOSED SERVICE INSTALLATION

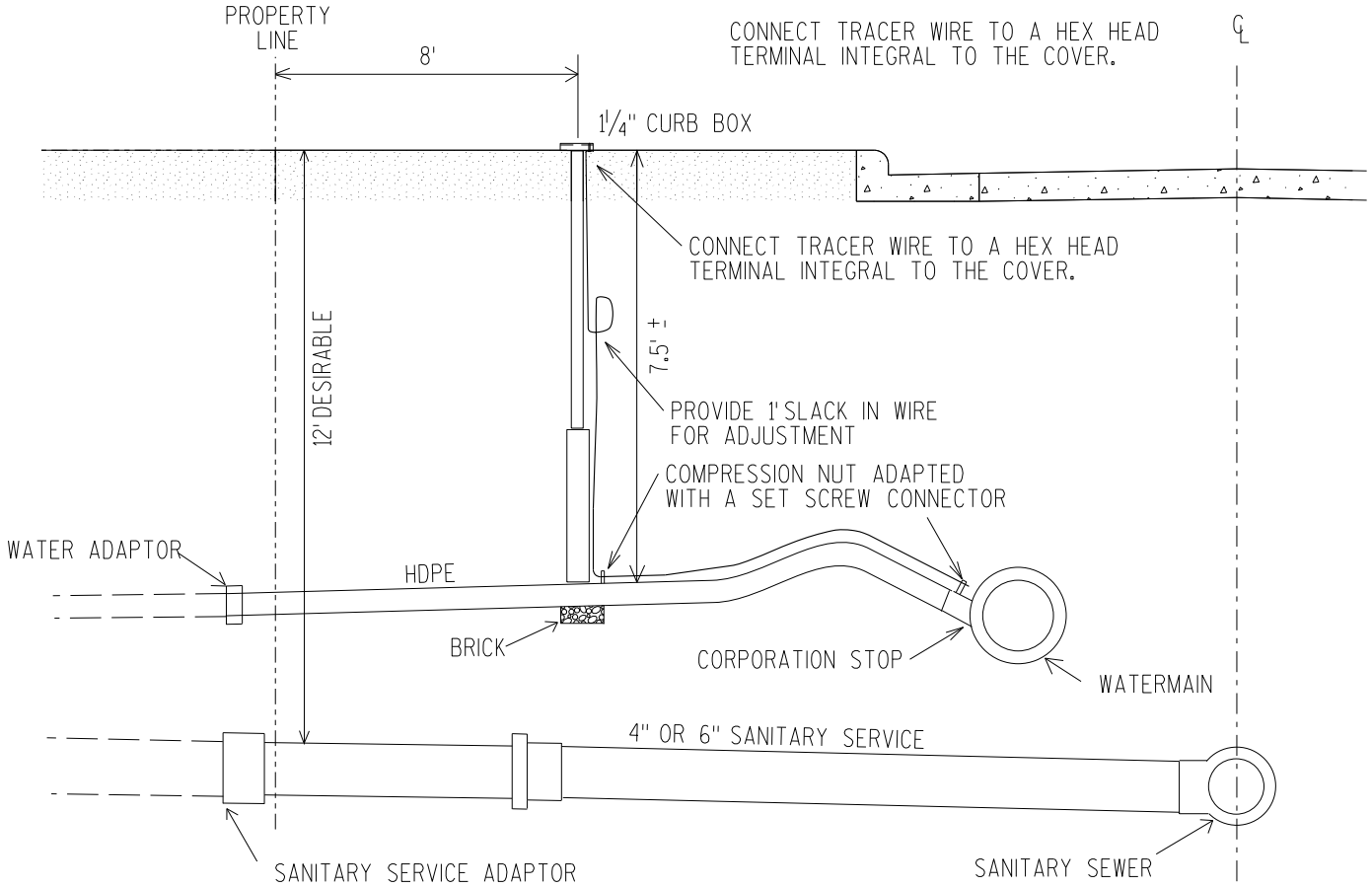

NOTE: TAP WATERMAIN ON 45° WITH PIPE.
SANITARY SERVICE TO BE INSTALLED AT A MINIMUM GRADE OF ¼" PER FOOT UNLESS OTHERWISE DIRECTED BY THE ENGINEER.
MINIMUM SEPARATION BETWEEN SERVICES SHALL BE 12" VERTICAL AND 18" HORIZONTAL.

EXISTING SERVICE INSTALLATION

MEGA LUG GASKETS REQUIRED UNLESS DIRECTED OTHERWISE BY THE ENGINEER.
RETAINER GLANDS ONLY WHEN APPROVED BY THE ENGINEER

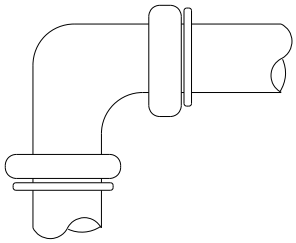

ELBOWS

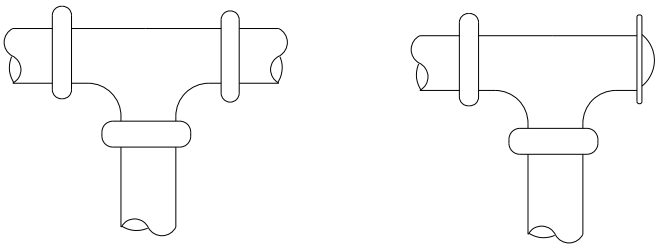

TEES

ALL PLUGS TO BE MECH. RETAINED

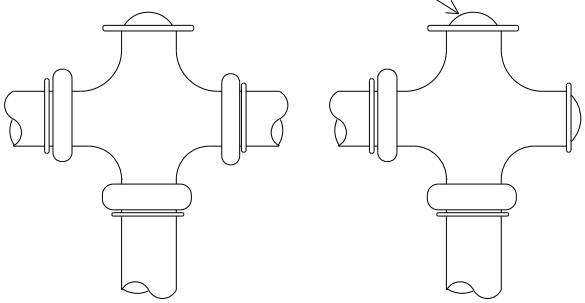

CROSSSES

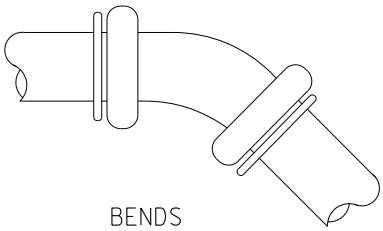

BENDS

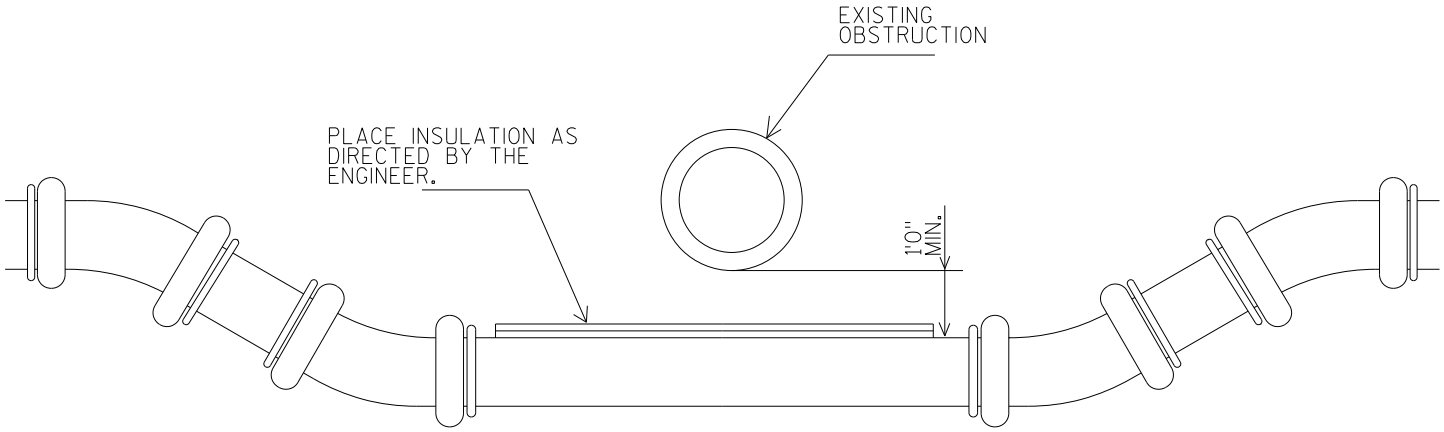

OFFSET WATERMAIN DETAIL

HORIZONTAL OR VERTICAL

WATERMAIN JOINT DETAIL

CITY OF ALTOONA

S P E C I F I C A T I O N S

DIVISION 2700 - SANITARY AND STORM SEWER

2700.1 - DESCRIPTION

2700.1.1 - General

Work in this section shall consist of the installation of sanitary and storm sewer including catch basins and service leads, manholes, and inlets as shown on the Plans and Details as provided by the contract.

Work in this section shall conform to the requirements of comparable sections of the WSSHSC including Sections 607-612 except as modified within this specification.

The labor, materials, and equipment provided by the Contractor shall be of the quality, quantity, and condition necessary to complete the work in a **top quality manner**.

2700.2 - MATERIALS

2700.2.1 - General

All materials furnished by the Contractor shall conform to the requirements of this section.

All materials delivered to the job site for use in the construction of sanitary and storm sewer must pass a field inspection before installation. The Contractor shall allow the Engineer adequate time for the inspection of materials. All materials found to be defective shall be rejected by the Engineer and shall be removed from the site immediately. No compensation will be paid for delays caused by the inspection, whether or not the materials are accepted.

All sanitary and storm sewer materials, if delivered to the job site prior to construction, shall be stored in an approved storage area, and shall be kept safe from damage.

All pipe and accessories shall be handled with care in order to avoid damage. Under no circumstances shall such materials be dropped or skidded along other pipe.

2700.2.2 - Bedding

Native materials meeting the bedding requirements may be used for the installation of sanitary sewer and storm sewer. All sanitary sewer or storm sewer shall be bed in sand, crushed stone or pea gravel meeting the following requirements:

2700.2.2.1 - Bedding Sand

Bedding sand shall consist of durable particles ranging in size from fine to coarse in a substantially uniform combination. Unwashed bank-run sand, rejected concrete sand, and crushed bank-run gravel will be considered generally acceptable under this specification. The presence of approximately 6% of fine clay or loam particles is desirable, but clay or loam lumps are not permitted. The maximum moisture content shall be 10%.

Bedding sand shall conform substantially to the following gradation requirements:

GRADING REQUIREMENTS FOR FINE BEDDING SAND	
Sieve Sizes	**Percentage Passing By Weight**
1 Inch	100%
No. 16	45-80
Material Finer Than No. 200	5-8

2700.2.2.2 - Crushed Stone

Crushed stone shall be made from crushing sound limestone, dolomite ledge rock, or other rock materials, which is hard, tough and durable. The crushing process shall produce material of which 85% to 100% of the particle shall have at least one machine fractured face.

GRADING REQUIREMENTS FOR 3/8 INCH CRUSHED STONE	
Sieve Sizes	**Percentage Passing By Weight**
1/2 Inch	100%
3/8 Inch	90-100
No. 8	0-15
No. 30	0-3

2700.2.3 - Backfill Material

2700.2.3.1 - Excavated Material

Excavated material may be used as backfill if it is suitable material in the judgment of the Engineer.

2700.2.3.2 - Granular Backfill

Granular material for backfilling shall consist of durable particles ranging from fine to coarse in a substantially uniform combination. Some fine clay or loam particles are desirable, but they shall not be present in the form of lumps. Granular backfill shall conform to the following gradation requirements:

GRADING REQUIREMENTS FOR GRANULAR BACKFILL	
Sieve Sizes	**Percentage Passing By Weight**
2 Inch	95-100
No. 4	35-60
Finer Than No. 200	5-8

2700.2.3.3 - Cover Material

Material, which is to be used around, over the sewer pipe, and above the pipe bedding, shall be termed cover material. It shall consist of durable particles ranging in size from fine to coarse in a substantially uniform combination. Unwashed bank-run sand, and crushed bank-run gravel will be considered generally acceptable under this specification. This material shall conform substantially to the following gradation requirements.

GRADING REQUIREMENTS FOR FINE COVER MATERIAL	
Sieve Sizes	**Percentage Passing By Weight**
1 Inch	100%
3/4 Inch	85-100
3/8 Inch	50-100
No. 4	35-65
No. 40	15-30
No. 200	5-15

2700.2.4 - Backfill Concrete

Backfill concrete shall be used for backfill of sewers constructed in tunnels for piers under utilities, and where concrete backfill is specified. When site mixing is used, it may be proportioned either one and one-half bags of Portland Cement, 6 cubic feet of concrete sand, and 12 cubic feet of coarse aggregate; or one bag of Portland Cement and 12 cubic feet of graded aggregate.

2700.2.5 - Cellular Concrete

Lightweight cellular concrete may be used for filling abandoned sewers, as a grouting mixture for filling voids and as a substitute for backfill concrete in tunnels. The cellular concrete shall be produced by blending preformed foam with cement-sand grout slurry to produce concrete having a fresh weight per cubic foot of not less than 75 pounds. The cement-sand grout slurry shall be proportioned to contain 8 bags of Type 1 or 1A Portland cement per cubic yard.

2700.2.6 - General Pipe Requirement

2700.2.6.1 - Marking

Each length of pipe shall bear the name or trademark of the manufacturer. Each length shall likewise be marked to designate the class, wall thickness designation or strength of the pipe. The markings shall be made on the exterior or interior of the pipe barrel and shall be plainly visible. Pipe with either elliptical or quadrant reinforcement shall have the word "Top" or "Bottom" clearly stenciled on the inside of the pipe at the correct place to indicate the proper position when laid.

2700.2.6.2 - Fittings

Fittings, such as wyes, tees and bends, shall be made in such a manner as will provide strength and water tightness at least equal to the class of the adjacent main line pipe to which they are joined and shall conform to all other requirements specified for pipe of corresponding class and internal diameter.

2700.2.6.3 - Handling Holes

Pipe handling holes are permitted only on reinforced concrete storm sewer pipe 21 inches or larger in diameter. One handling hole is permitted on straight lengths of pipe, less than 48" in diameter, and two on pipe 48" and larger in diameter, connection pipe and cut-off pipe for curves. After the pipe has been laid, the handling holes shall be promptly plugged with mortar. The Owner reserves the right to prohibit handling holes they are deemed undesirable.

2700.2.6.4 - Rejection

Pipe shall be subject to rejection for failure to conform to any requirement of the specifications or for any of the following reasons:

(a) Cracks, sufficient to impair the strength, durability, or serviceability of the pipe.

(b) Defects that indicate improper proportioning, mixing and molding.

(c) Variations of more than 1/8 inch per linear foot in alignment of a pipe intended to be straight.

(d) Insecure attachment of spurs.

(e) Damaged ends, where such damage would prevent making a satisfactory joint.

(f) Extensive patching or painting of any surface of the pipe with the exception of miter pipe that is formed by the removal of wedge shaped sections from the middle of the pipe.

(g) Used or repaired pipe.

The Contractor shall remove pipe that has been rejected by the Engineer from the construction site and replaced with pipe, which meets the requirements at no cost to the owner.

2700.2.6.5 - Sanitary Sewer Pipe

The types of pipe shown in the following table shall be used for sanitary sewer construction. In location where the PVC pipe material between two manholes changes from SDR 35 to SDR 26, the PVC pipe material shall be SDR 26 for the entire length between the manholes. No additional compensation shall be made for the change in pipe material in these locations.

PIPE MATERIAL (Mains)	JOINT TYPE	ASTM
Concrete – Reinforced	Rubber Gasket	C-76
Polyvinyl Chloride (PVC) SDR 35 – Depth to 20' SDR 26 – Depth > 20'	Rubber Gasket or Solvent Cemented	D-3034
Ductile Iron Class 51 or 52	Slip Joint	AWWA C-150

PIPE MATERIAL (Services)	CLASS
Ductile Iron	Class 51 or 52
PVC	SDR 26

2700.2.6.6 - Storm Sewer Pipe

The types of pipe shown in the following table shall be used for storm sewer construction.

PIPE MATERIAL	JOINT TYPE	ASTM	AASHTO
Concrete – Reinforced	Rubber Gasket	C-76	
High Density Polyethylene (HDPE)	Rubber Gasket	F 2306	M294 & M252

Reinforced concrete sewer pipe or high-density polyethylene pipe shall be used for storm sewer construction, in the locations designated on the plans. Reinforced concrete sewer pipe manufactured in compliance with ASTM C-76, Class III, IV, or V specifications, as required for backfill, traffic and construction loads on the pipe. Pipe classes shall be as shown in the contractor's bid form.

Unless specified on the plans or directed by the Engineer, the Contractor shall use the class of concrete pipe as specified in the Bid Form.

Concrete sewer pipe shall have gasketed joints with round o-ring gaskets lubricated at time of installation or self-lubricating gaskets, manufactured in compliance with ASTM C-443 specifications.

2700.2.7 - Polyvinyl Chloride (PVC) Pipe

2700.2.7.1 - General Requirements

PVC pipe and fittings furnished under the classification shall meet the requirements for Type PSM Polyvinyl Chloride Sewer Pipe and Fittings as set forth in ASTM Designation D-3034 including the detailed requirements of Sections 2700.2.7 together with the following detailed requirements which shall govern where they alter the ASTM Standards.

2700.2.7.2 - Test Report

As requested by the Engineer, the Contractor shall supply tests conducted by an approved testing agency to determine:

(a) Pipe Dimensions
   1. Average outside diameter
   2. Average inside diameter
   3. Minimum and average inner concentric tube thickness
   4. Minimum and average outer concentric tube thickness

(b) Pipe stiffness at 5% deflection

(c) Load and per cent deflection at rupture of either inner or outer wall.

The test report shall show the results of these tests and the comparable A.S.T.M. requirements.

These tests are to be conducted on a random sampling basis covering representative extrusion dates making up a project delivery of each individual pipe size.

2700.2.7.3 - Fittings

Fittings such as saddles, elbows, tees, wyes, and others shall be of material and construction corresponding to, and have a joint design compatible with the adjacent pipe. Approved adapters shall be provided for transitions to other types of pipe. Fittings shall be molded.

2700.2.7.4 - Pipe Joints

Either solvent cement or rubber gasket joints may be used individually but not in combination with each other on the same joint.

2700.2.8 - Reinforced Concrete Pipe

2700.2.8.1 - Requirements

Pipe furnished under the classification shall meet the requirements set forth in A.S.T.M. Designation C-76 for circular pipe, and A.S.T.M. Designation C-507 for elliptical pipe, or A.S.T.M. Designation C-655 for D-load pipe, including the detailed requirements of Division 1000, and Section 2700.2.7 and the following detailed requirements which shall govern where they alter the A.S.T.M. Standards.

2700.2.8.2 - Acceptance

Acceptance of reinforced concrete pipe shall be on the basis of plant load-bearing tests, material tests, and inspection of manufactured pipe for visual defects and imperfections.

Pipe lot acceptance of circular reinforced concrete sewer pipe shall be determined by a three-edge bearing load test to the 0.01 inch crack D-load as specified in Tables 1 through 5 of A.S.T.M. Designation C-76 for those pipes manufactured in accordance with the design tables. The Engineer reserves the right to direct that loading be continued to the load to produce the 0.01-inch crack and to the ultimate strength of the pipe. The cost of the pipe tested to ultimate strength shall be borne by the Owner.

Pipe more than 16 feet in length shall have longitudinal reinforcement approved by the Engineer.

2700.2.8.3 - Miter Pipe or Bends

Miter pipe or bends shall be manufactured to provide for the required angle of deflection. Sufficient additional reinforcement shall be added at the spring lines and top and bottom of the pipe to prevent shearing after installation. Repairs to complete the pipe shall be such that the completed unit shall have the same strength as that of the remainder of the pipe barrel and the concrete used to complete the section shall not spall or separate.

Miter pipe shall be used for all elliptical pipe laid on a curve. Miter pipe or bends for circular sewers shall be used only with the approval of the Engineer.

2700.2.9 - Ductile Iron Sewer Pipe

2700.2.9.1 - Requirements

Where specifically allowed in the Contract Documents, pipe furnished under this classification shall meet the requirements, set forth in A.S.T.M. Designation A-746, class 51 or 52, including the detailed requirements of Division 1000, and Division 2600 together with the following detailed requirements, which shall govern where they alter the A.S.T.M. Standards.

2700.2.9.2 - Description

Ductile iron gravity sewer pipe shall consist of pipe centrifugally cast in metal or sand-lined molds having bell and spigot ends designed for rubber gasket push-on joints.

2700.2.9.3 - Coating

The pipe shall have a cement mortar lining and internal and external bituminous coats in accordance with Section 2600.2.4.4 - Water Main.

2700.2.9.4 - Marking

Each pipe shall have the weight, class or nominal thickness and casting period shown on it. The manufacturer's mark, the year in which the pipe was produced, and the letters "DI" or "DUCTILE" shall be cast or stamped on the pipe. Markings shall be clear and legible and all cast marks shall be on or near the bell. All letters and numerals on pipe size 14 inches and larger shall not be less than 1/2 inch in height.

2700.2.9.5 - Force Main

Class 52 Ductile Iron, with slip joint conforming to AWWA Specification C-150 may be used for force main construction. All fittings and bends shall be secured against movement by mechanical restraints as outlined for water main pipe in Section 2600.3.6 - Water Main Installation.

2700.2.10 - Corrugated Metal Pipe

2700.2.10.1 - Requirements

Corrugated metal pipe and pipe arch furnished under this classification shall meet the requirements set forth in A.A.S.H.T.O. Designation M-36. Structural plate shall meet the requirements of A.A.S.H.T.O. Designation M-167.

2700.2.10.2 - Dimensions and Gages

The dimensions, sheet thickness and minimum sheet gage numbers shall be as shown in the following tables for corrugated metal pipe. All dimensions are measured from the inside crests of the corrugations.

CORRUGATED METAL PIPE DIMENSIONS AND GAUGES			
Nominal Dia. In.	**Minimum Gauge No.**	**Sheet Thickness In.**	**Area Sq. Ft.**
6	18	0.052	0.20
8	16	0.064	0.35
10	16	0.064	0.55
12	16	0.064	0.79
15	16	0.064	1.23
18	16	0.064	1.77
21	16	0.064	2.41
24	16	0.064	3.14
30	14	0.079	4.91
36	14	0.079	7.07
42	12	0.109	9.62
48	12	0.109	12.57
54	12	0.109	15.90
60	10	0.138	19.64

The average inside diameter of circular pipe shall not vary more than ±1/2 inch or 1%, whichever is greater from the nominal diameter.

2700.2.10.3 - Coupling Bands

Coupling Bands shall conform to A.A.S.H.T.O. Designation M-36 and shall be made of the same base metal as the pipe. The bands shall not be less than 7 inches wide for diameters of 8 inches to 30 inches, inclusive; not less than 12 inches wide for pipe with diameters 36 inches to 60 inches, inclusive; and not less than 24 inches wide for pipe with diameter greater than 60 inches. Such bands shall be so constructed as to lap on an equal portion of each of the pipe sections to be connected, and preferable shall be connected at the ends by galvanized angles having minimum dimensions of 2x2x3/16 inches.

The 7-inch band shall have at least two galvanized bolts not less than 1/2 inch diameter. The 12-inch band shall have three, 1/2 inch bolts. The 24-inch band shall have at least five, 1/2 inch bolts. Other equally effective methods of connecting the pipe may be used if approved by the Engineer. Coupling bands may be two numerical thicknesses lighter than that used for the pipe but not less than 0.052 inches thick (18 gage).

All bands for smooth-lined pipe shall not be less than 0.064 inches thick (16 gage), with a minimum width of 5 corrugations.

2700.2.10.4 - Bituminous Coated Corrugated Metal Pipe

When bituminous-coated corrugated metal pipe is specified it shall conform to the above specifications and shall be coated uniformly inside and out with a bituminous material to a minimum thickness of 0.05 inches, measured on the crests of the corrugations. The bituminous material shall meet the requirements set forth in A.A.S.H.T.O. Designation M-190.

2700.2.10.5 - Bituminous Coated and Paved Corrugated Metal Pipe

When bituminous coated and paved corrugated metal pipe is specified it shall conform to the above specifications and shall have a smooth pavement. This smooth pavement shall be formed in the invert by filling the corrugations with bituminous material meeting the requirements set forth in A.A.S.H.T.O. Designation M- 190. The width of this pavement shall be a minimum of 1/4 the circumference of circular pipe and 40% of the circumference, centered over the flat-bottom section for pipe arch. The pavement, except where the upper edges intersect the corrugations, shall have a minimum thickness of 1/8 inch and a maximum thickness of 1/2 inch above the crest of the corrugations.

2700.2.10.6 - Smooth-Lined Corrugated Metal Pipe

When smooth-lined corrugated metal pipe is specified it shall conform to the requirements of Bituminous Coated Corrugated Metal Pipe with the following exceptions:

(a) The full inside circumference of the pipe shall be uniformly paved with bituminous material meeting the requirements of A.A.S.H.T.O. Designation M-190. This pavement shall be applied by a centrifugally spun method to a minimum thickness of 1/8 inch and a maximum thickness of 1/2 inch above the crests of the corrugations.

(b) All rivets shall be located in the inside valleys of the corrugations.

(c) Connecting lengths of pipe shall be fabricated to form a butt with a tolerance of 1/4 inch. When the joint opening between two-coupled pipe exceeds 1/4 inch, this entire space shall be filled with an approved bituminous filler material.

2700.2.10.7 - Connections

(a) Wherever possible connections shall be shop fabricated.

(b) All connections cut in the field shall be saw-cut and a saddle connection of 16-gauge material, bolted on the corrugated metal pipe with 1/2 inch diameter galvanized bolts. All cuts in coated corrugated metal pipe and pipe arch shall be saw-cut.

2700.2.10.8 - Repair of Damaged Spelter Coating

Units on which the spelter coating has been burned by welding or otherwise damaged shall be repaired in the following manner:

The portion of the unit on which the spelter coating has been burned or damaged shall be thoroughly cleaned by wire brushing or blasted with sharp sand or steel grit. The cleaned area shall extend at least 1/2 inch over the undamaged section of galvanized coating. The blasted area shall be coated with two coats of asphaltic base, aluminum paint.

2700.2.11 - Corrugated Aluminum Pipe

2700.2.11.1 - Requirements

Where specifically allowed in the Contract Documents, pipe and pipe arch furnished under this section shall meet the requirements set forth in A.A.S.H.T.O. Designation M-196 together with the following detailed requirements which shall govern where they alter the A.A.S.H.T.O. Standards.

2700.2.11.2 - Dimensions and Gages

The dimensions, sheet thickness and minimum sheet gage numbers shall be as shown in the following tables for corrugated metal pipe. All dimensions are measured from the inside crests of the corrugations.

CORRUGATED ALUMINUM PIPE DIMENSIONS AND GAUGES			
Nominal Dia. In.	**Minimum Gauge No.**	**Sheet Thickness In.**	**Area Sq. Ft.**
6	18	0.048	0.20
8	16	0.060	0.35
10	16	0.060	0.55
12	16	0.060	0.79
15	16	0.060	1.23
18	16	0.060	1.77
21	16	0.060	2.41
24	14	0.075	3.14
30	14	0.075	4.91
36	12	0.105	7.07
42	12	0.105	9.62
48	12	0.105	12.57
54	12	0.105	15.90
60	8	0.167	19.64

The average inside diameter of circular pipe shall not vary more than plus or minus 1/2 inch or 1 percent, whichever is greater, from the nominal diameter.

2700.2.11.3 - Coupling Bands

Coupling bands shall meet the requirements set forth in A.A.S.H.T.O. Designation M-196 and shall conform to the dimensional requirements of Section 2700.2.10.3 - Coupling Bands.

2700.2.12 – High Density Polyethylene (HDPE) Pipe

2700.2.12.1 - General Requirements

HDPE pipe and fittings furnished under the classification shall meet the requirements as set forth in A.S.T.M. Designation F 2306, or AASHTO M294 and M252.

2700.2.12.2 - Submittals

As requested by the Engineer, the Contractor shall submit the following items.

a) Manufacturer's certification that the material delivered has been satisfactorily produced in accordance with the requirements as outlined in ASTM F 2306
b) A detailed design of the pipe joints and gaskets.
c) Manufacturer’s laboratory certification that the pipe joint system has been tested in accordance with ASTM D 3212 and that it meets or exceeds those requirements.
d) Manufacturer’s certification that the pipe provided meets the requirements of ASTM F 2306

2700.2.12.3 – Quality Assurance

The following requirements shall apply.

a) Pipe shall be available to Owner's Representation for inspection.
b) Material Brands and/or pipe shall not be mixed.
c) Pipe shall be considered defective and will be rejected when:
    1. Pipe walls are cracked.
    2. Inner wall is delaminated or cracked.
    3. Bells or spigots are damaged.
d) Pipe Marking - pipe and fittings shall be marked as follows:
    1. Manufacturer's name, trademark or logo.
    2. Nominal Diameter.

2700.2.12.4 - Delivery, Storage and Handling

The Contractor shall follow the steps listed below to maintain the integrity of the delivered product.

e) Inspect the pipe shipment to identify shifted loads, broken packaging, or shipment damage.

f) Unload the pipe in a manner that does not put stress on the pipe or strike anything causing damage.
g) Place pipe and pipe package units on level ground stacked no more than 8 feet high. Do not store close to heat sources.
h) Do not unwrap gaskets on the spigot end of the pipe until the pipe is to be installed.
i) Handle pipe in a manner to prevent blows, abrasion damage, gouging or cutting.

2700.2.13 - Manholes

2700.2.13.1 - Sanitary Manholes

Sanitary manholes shall be precast as shown in the details. Where the size or number of connections preclude the practical use of a precast bottom section, concrete brick or block may be used up to approximately eight (8) inches above the top of pipe.

2700.2.13.2 - Storm Manholes

Storm manholes shall be precast for manholes over pipes up to 42 inches. Storm manholes over pipes 48 inches and greater shall be either:

(1) a precast tee for constructing manholes over new storm sewers,

(2) a saddle manhole for constructing manholes over existing storm sewers,

(3) a precast manhole of a size and type shown in the details. A precast manhole shall only be used when it is specifically shown on the plans or impractical to use a tee or saddle manhole and approved by the Engineer.

2700.2.13.3 - Manhole Risers and Flat Tops

Manhole risers shall be 48 inches minimum diameter up to the beginning of the corbel section. From this point the manhole shall be corbelled in at approximately 1/2 inch horizontal to one-inch vertical to the diameter of the manhole frame. The face of the manhole in which the steps are installed shall be kept vertical.

Flat top slabs may be used only where specified or by permission of the Engineer. The elevation of the manhole frame shall be taken from the plans or grade stake.

2700.2.13.4 – Flexible Pipe-to-Manhole Boots

All sanitary manholes shall be supplied with a flexible pipe-to-manhole boot of the diameter, line, and grade indicated on the plans or in the specifications.

2700.2.13.5 - Manhole and Inlet Inverts

Manhole inverts shall be poured with air entrained ready-mix concrete with a compressive strength of 3000 PSI in 28 days. The ready-mix concrete shall be in accordance with Division 2400 - Concrete Paving. With the approval of the Engineer, the Contractor may batch mix concrete onsite with a mechanical mixer. The mason sand and mortar for onsite batch mix concrete shall meet the requirements of Section 2900.2.12.5.1 and Section 2900.2.12.5.2 and have a compressive strength of 3000 PSI in 28 days.

2700.2.13.5.1 - Mortar for Inverts

Mortar to be used for joints for sewer pipe or masonry units, for plastering or for any other specified use shall meet the requirements for Type "M" mortar of the property specification of ASTM Designation C-270. Mortar shall consist of a mixture of clean mason sand, water and air-entraining cementitious materials.

2700.2.13.5.2 - Mason Sand for Inverts

Mason sand shall meet the requirements of the Specification for Aggregate for Masonry Mortar, ASTM Designation C-44 except as modified by these specifications. It shall consist of sand composed of clean, hard, tough, durable grains of approved inert materials from natural deposits, and meet the following grading requirements.

GRADING REQUIREMENTS FOR MASON SAND	
Sieve Size	**Percentage Passing By Weight**
No. 8	100%
No. 50	15-35
No. 100	2-10

2700.2.14 - Inlets

All inlets shall be precast concrete to the dimension and size as shown on the Plans and Details.

2700.2.15 - Concrete Brick and Block

Concrete brick and block masonry units for building inlets, manholes, and manhole cones and chimneys shall conform to ASTM C-139.

2700.2.16 - Mortar

Mortar to be used for joints for sewer pipe or masonry units, for plastering or for any other specified use shall be a preblended air-entrained underground utility mortar mix manufactured by SPEC MIX or approved equal which meets the requirements for mortar of ASTM Designation C-270.

2700.2.17 - Polystyrene Insulation

Polystyrene insulation shall be suitable for underground installation. It shall meet Fed. Spec. HH I 524C. It shall have a compressive strength of at least 40 PSI, minimum R-value of 5, and maximum water absorption of 0.17% by volume. It shall be provided in 4-foot by 8-foot sheets. Sheets shall be no less than 1-inch or greater than 2-inches in thickness.

2700.2.18 - Manhole/Inlet Castings

Manhole and inlet castings shall be installed by the model and type as shown on the Plans and Details. They shall be furnished along with the proper amount of two (2) inch concrete adjustment rings.

STANDARD MANHOLES/INLET CASTINGS (Neenah Numbers or Approved Equal)	
Standard Manhole	R-1642 With Concealed Pickholes & "T" Sealed Gasket
Type "B" Inlet	R-3067-L or R-3067-V
Type "C" Inlet	R-3065-L or R-3065-V
Type "CD" Driveway Inlet	R-3513
Type "BD" Driveway Inlet	R-3511
Inlet Casting Type "E" Beehive	R-2560-E1
Inlet Casting Type "F' Stool	R-4341-A
Type "C" Manhole	R-2501 W/Type C Grate

2700.2.19 - Manhole Chimney Seals

Chimney seals shall be applied to all manholes, and shall be external type, rubber sleeve, unless indicated otherwise in the Contract Documents. The sleeve and extension shall have a minimum thickness of 3/16 inches and shall be extruded or molded from a high grade rubber compound conforming to the applicable requirements of ASTM C923, with a minimum 1,500 psi tensile strength, maximum 18 percent compression set and hardness (durometer) of 48 5. The sleeve shall be doubled pleated with a minimum unexpanded vertical height of 8 inches and be capable of vertical expansion of not less than 2 inches when installed.

The bands used for compressing the sleeve and extension against the manhole shall be fabricated from 16 gauge stainless steel conforming to ASTM A240 Type 304. All screws, bolts or nuts used on this band shall be stainless steel conforming to ASTM F593, Type 304.

Manhole chimney seals shall provide a watertight seal from 2 inches above the bottom of the casting to 2 inches below the top of the manhole cone section or flat top.

2700.2.20 – Storm Inlet Chimney Seals

All adjusting ring sections on storm inlets shall be sealed with an external rubberized joint wrap, manufactured by Cretex or approved equal. The wrap shall extend from two inches below the bottom adjusting ring to the flange of the storm inlet casting. The wrap shall not be applied until the casting has been fine adjusted for the final curb or ground elevation. The Contractor shall submit the proposed product to the Engineer for review and approval.

2700.2.21 - Existing Casting Removed

All existing manhole and inlet casting removed as part of the project shall remain the property of the Owner, and shall be stored on-site to be picked up by the Owner. Any casting removed by the Contractor from the site shall be returned to the Owner promptly by the Contractor in kind.

2700.2.22 - Reinforced Concrete Pipe Adapters

The Contractor shall provide a reinforced concrete pipe adapter of the class of pipe specified at all locations where the existing concrete pipe stub and the new concrete pipe join. This adapter shall be a minimum of 4 feet in length and shall have a gasketed spigot end that will fit the existing stub and a gasketed bell and that fits the new concrete pipe.

The placement of a concrete collar to adapt the old concrete stub to the new concrete pipe shall not be acceptable unless approved by the Engineer. Under no circumstances shall the Contractor pour a concrete collar without the prior approval of the Engineer.

2700.2.23 - Coal-Tar Epoxy Inner Surface Coating

Where specified in the Contract Documents, the inner surface of the reinforced concrete pipe plus that portion of the joint between the inside of the pipe and the rubber gasket, shall be coated with two coats of coal-tar epoxy. The coating shall be applied in stick accordance with the manufacturer specifications and instructions. Each coat shall be applied at a rate to obtain a dry film thickness of 8 mils per coat or a total film thickness of 16 mils. The wet film thickness shall be a minimum of 11 mils.

Where thinning is necessary, only products of the manufacturer furnishing the coating and for the particular purpose shall be used. All thinning shall be done in strict accordance with the manufacturer's specifications and instructions.

2700.2.24 – Tracer Wire

Tracer Wire for sanitary sewer shall be consistent with DIVISION 2800 – LOCATING WIRE FOR WATER AND SANITARY SEWER and as shown in the details.

2700.3 - METHODS

2700.3.1 - General

Sanitary and storm sewer installation shall conform to the requirements of this document.

The Engineer reserves the right to order pipe laying discontinued whenever, in his opinion, there is danger of the quality of work being impaired because of cold weather.

2700.3.2 - Line and Grade

The Contractor shall be responsible for the accurate transfer of all construction alignment and grades from the primary line and grade as established by the Engineer. In addition, the Contractor shall supply, at his own cost, and have available on site, the proper surveying equipment for the transfer of grades. If a laser is used during piping, a transit will be required to establish the alignment.

2700.3.3 - Abandonment and Salvage

Sewer and storm sewer leads, which are to be abandoned, shall be bulkheaded with an 8-inch concrete bulkhead. Sewers, sewer leads, and sewer structures 15-inches and larger, which are to be abandoned and have not been removed, shall be filled with sand or Cellular Concrete unless otherwise indicated on the plans. All existing storm sewer, storm manholes, and inlets that are no longer in use shall be bulkheaded and abandoned. All castings on such abandoned structures are the property of the Owner and shall be removed by the Contractor and shall store it on-site for salvage by the Owner. All abandoned manholes and catch basins shall be removed to a depth of 3 feet below the proposed or established grade or existing street grade, whichever is lower. The cost of abandoning sewer, storm sewer leads, and sewer structures shall be included in the unit price bid for new sewers or new sewer structures.

2700.3.4 - Excavation and Backfill

2700.3.4.1 - Trench Width

The Contractor shall be responsible to keep a safe trench width at all times. The maximum width of the trench excavation at the top of the pipe shall be the outside diameter of the pipe used plus 24 inches. This width may be increased to allow for stringers and sheathing when required. The Engineer reserves the right to limit the length of open trench at any time.

The Contractor shall be responsible to use sheathing and bracing as required by industry codes, as shown on the Plans or as ordered by the Engineer to protect life, property or the work. Unless "Sheathing and Bracing" is included as a bid item, such work shall be considered incidental to the excavation.

2700.3.4.2 - Trench Excavation

Excavated material shall be placed in a manner that will not obstruct the work nor endanger the workers or the public, or obstruct sidewalks, driveways, roadways, or other structures. Placement of excavated material shall be done in compliance with federal, state, and local regulations.

If the bottom of the trench is of undesirable material, such as organic soil, etc. or there is the presence of ground water which causes a condition that cannot adequately support the pipe, 3/4" washed crushed stone shall be placed to stabilize the bedding area. The bedding material shall be placed up to the spring line of the pipe to a maximum of 1 foot on each side of the pipe.

2700.3.4.3 - Ground Water, Dewatering or Sewage

The Contractor shall keep all excavations free of water or sewage during and until completion of the work, as directed by the Engineer. All costs for making all extra excavations necessary to prevent the water or sewage from interfering with the proper construction of the work, bailing, pumping and dewatering shall be borne by the Contractor, and included in the prices bid for other items of work.

2700.3.4.4 - Trench Backfill

Sewer piping, which does not terminate in a manhole, shall not be backfilled until the ends have been surveyed for position and grade. All trenches shall be backfilled with excavated material, which, in the judgment of the Engineer, is suitable for backfilling. Unstable backfill materials include vegetable or other organic matter, all types of refuse, large pieces or fragments of stone, concrete, bituminous concrete, and other material as in the judgment of the Engineer are unsuitable for backfilling. Frozen backfill material shall not be used.

If there is a deficiency of excavated material, the Contractor, upon the written order of the Owner, shall furnish an additional quantity of granular backfill.

2700.3.4.5 - Compaction of Backfill Material

Backfill shall be consolidated by Mechanical Compaction. Mechanical compactors shall be used to achieve uniform consolidation of the material. The backfill material shall be placed in one-foot lifts and be compacted to a minimum of 95% modified proctor density. All required compaction testing shall be performed by the Owner at no cost to the Contractor. The Contractor shall fully cooperate and provide whatever assistance, time and safe access is necessary for the performance of the tests.

Special compaction methods around manholes and other appurtenances shall be used to insure proper compaction.

2700.3.4.6 - Temporary Street Restoration

Where an open trench is cut in a traveled roadway, and the roadway is not immediately surfaced the Contractor shall supply temporary surfacing of six (6) inches of crushed aggregate which conforms to the requirements of Section 2300.

Backfilling and surfacing shall be included in the cost of sewer. Such backfilling and surfacing requirements may not be shown on the plans.

2700.3.4.7 - Excavation in Rock

Rock excavation shall be defined to include all hard, solid rock in ledges, bedded deposits, unstratified masses, and all natural conglomerate deposits firmly cemented to present all the characteristics of solid rock. Rock excavation shall consist of all materials that cannot, in the Engineer's opinion, be excavated without drilling and blasting or without the use of rippers, together with boulders and other detached rock having a volume of one (1) cubic yard or more.

When rock is encountered, the Engineer shall be notified to measure or cross-section the area prior to its removal. Any rock that is removed before the Engineer measures it will not be allowed as payment.

The rock shall be excavated to a point six (6) inches below the outside of the barrel, and to a width, not to exceed the pipe diameter plus 24 inches. If blasting is required for removal of rock, it shall be done in strict accordance with The Wisconsin Administrative Code on Explosives and all local ordinances regulating blasting. The Contractor will be held solely responsible for any damage to work performed by others or to adjacent property due to his blasting operation.

2700.3.5 - Pipe Laying

2700.3.5.1 - Bedding

After the trench has been excavated, a layer of bedding material shall be spread over the bottom of the trench at a minimum depth of four (4) inches. The pipe can be installed and jointed with a uniform support from the bedded material. The bedding material shall be brought up to a level even with the spring line of the pipe and carefully compacted by hand.

2700.3.5.2 - Cover

Cover material shall be placed after the pipe has been properly bedded and jointed. Placement of cover material shall be by hand or equally careful means, so as to avoid jarring or pushing the pipe and to assure that no large stones or foreign materials are allowed to come into contact with the pipe. Cover material shall extend approximately one foot above the top of the pipe, and shall be carefully and uniformly compacted to 90% of the modified proctor density. Following the proper placement of the cover material the trench can be backfilled.

Where corrugated steel pipe is constructed, compaction around and 1-foot over the pipe must be compacted to at least 90% proctor, and backcasting will not be permitted until three (3) feet of cover has been placed over the pipe.

2700.3.5.3 - Pipe Protection

During all intermissions in construction of the sewer, the open end of the last pipe laid shall be covered to prevent sand, earth, or other materials from entering the pipe.

2700.3.6 - Manholes

2700.3.6.1 - General Requirements

The Contractor shall construct manhole structures at the location and grade and conforming to the requirements as shown on the Plans and Details.

2700.3.6.2 - Excavation

Excavation for manholes shall be limited to the size required for the proposed manhole. All undesirable material such as organic soils, etc., which cannot adequately support the manhole shall be removed below the normal manhole bottom and replaced with crushed stone.

2700.3.6.3 - Backfill

The manhole structures shall be backfilled in one-foot lifts, and compacted with special mechanical compactors as approved by the Engineer, to achieve 95% of the modified proctor density.

The invert shall not be poured until the manhole is completely built and backfilled. The invert shall be the same diameter as the larger of the adjoining sewers and shall be shaped as shown in the details.

2700.3.6.4 - Line and Grade

The proposed manhole elevations will be shown on the plans, actual manhole build shall be less the casting and adjusting rings as shown on the details. This will allow for any field adjusting as deemed necessary by the Engineer.

2700.3.6.5 - Manhole Frames and Covers

Manhole frames and covers shall be furnished and delivered to the job site by the Contractor unless otherwise specified in the Contract Documents. Final adjustment will be done prior to the finish surface placement.

2700.3.7 – Existing Sanitary Manhole Connection

2700.3.7.1 – General Requirements

The Contractor shall connect the sanitary sewer line to the existing sanitary manhole at the line and grade conforming to the requirements as shown on the Plans and Details.

2700.3.7.2 – Core Drilling

In locations where a new sanitary sewer line is proposed or an existing sanitary sewer line is to be replaced with a larger diameter pipe, the Contractor shall core drill the existing manhole at the proposed line, grade, and diameter indicated on the plans or in the specifications. In locations where the existing sanitary sewer line is being replaced with the same diameter pipe and at the same grade, no core drilling of the manhole shall be required. The diameter of the hole cored shall be sized to accept a flexible pipe-to-manhole boot.

2700.3.7.3 – Flexible Pipe-to-Manhole Boot

Where an existing sanitary manhole is core drilled, a flexible pipe-to-manhole boot shall be supplied and installed as part of the connection to the manhole.

2700.3.7.4 - Invert

The existing invert shall be modified to accept the new sanitary sewer line. Manhole inverts shall be poured with air entrained ready-mix concrete with a compressive strength of 3000 PSI in 28 days. The ready-mix concrete shall be in accordance with Division 2400 - Concrete Paving. With the approval of the Engineer, the Contractor may batch mix concrete onsite with a mechanical mixer. The mason sand and mortar for onsite batch mix concrete shall meet the requirements of Section 2900.2.12.5.1 and Section 2900.2.12.5.2 and have a compressive strength of 3000 PSI in 28 days.

2700.3.8 - Inlets

2700.3.8.1 - General Requirements

Inlets shall be constructed to the location and grade, and conforming to the requirements as shown on the Plans and Details. On streets constructed under this Contract, the Contractor shall remove and reset inlets as shown on the plans or directed by the Engineer.

2700.3.8.2 - Inlet Box or Drum

The box or inlet drum shall be set on a precast concrete base or cast with the concrete base. The base shall be of 3000 psi mixed concrete. The drum shall be set in a heavy bed of mortar. All joints, pipe openings and lifting holes shall be filled with mortar and hand brushed or troweled smooth. Inlet inverts shall be poured with concrete and finished.

2700.3.8.2 - Inlet Lead

The inlet leads shall be laid to the elevation given on the plans, or to a minimum average slope of 1/4 inch per foot. When this minimum cannot be attained, leads shall be laid as directed by the Engineer. The inlet lead pipe shall not extend more than 2 inches beyond the inside diameter of the storm structure. All excess pipe shall be removed and all metal reinforcing shall be cut flush with the existing concrete leaving no sharp edges.

2700.3.8.3 - Backfill

The inlet structures and lead shall be backfilled and compacted to one-foot lifts, and compacted with special mechanical compactors as approved by the Engineer, to achieve 95% of the modified proctor density.

2700.3.8.4 - Inlet Frames and Grates

Inlet frames and grates shall be furnished and delivered to the site by the Contractor, unless otherwise specified in the Contract Documents.

Concrete adjusting rings shall be set in a full bed of mortar. A minimum thickness of 1/2-inch of mortar shall be placed and maintained between the adjusting rings and the inlet masonry and between all concrete adjusting rings. The Contractor shall notify the Engineer 24-hours in advance of the adjusting of all inlet castings. After the Contractor has arrived at the project site to adjust inlets, the Contractor shall notify the Engineer. No inlet casting shall be adjusted without the Engineer present. If an inlet has been adjusted without the Engineer present, the Contractor shall remove the inlet casting and rings and reset the rings and inlet casting in the presence of the Engineer. Castings shall be furnished and set to established grade as shown on the plans or directed by the Engineer.

2700.4 - SERVICES

2700.4.1 - General

All building sewers shall be installed in accordance with the Wisconsin Administrative Code and all local plumbing codes and regulations.

2700.4.2 - Service Separation

2700.4.2.1 - Sewer and Water Services

Building services may be placed in a common trench if installed concurrently. If not installed concurrently, a minimum 8 foot horizontal separation must be maintained between the water service and building sewers. A minimum of 12 inches vertical and 18 inches horizontal shall separate the water service from a sanitary service.

2700.4.2.2 - Storm Sewer Service

Where ground conditions permit, the storm service shall be placed on a shelf in the sidewall of the sanitary service trench opposite to the water service.

The minimum clear distance between the storm and sanitary sewers shall not be less than 12 inches, and a minimum of 6 inches is required on either side of the pipe. The trench shall be excavated to a depth permitting a minimum of 4 inches of bedding material under the pipe.

2700.4.3 - Trench Backfill

All service trenches will be backfilled with an approved backfill material in one-foot lifts, and shall be compacted to 95% of the modified proctor density.

2700.4.4 - Fittings

2700.4.4.1 - Sanitary Service Fittings

Fittings for sanitary service connections shall be wyes, unless otherwise specified on the plans. These fittings shall be placed at an angle of 45 degrees above the horizontal unless otherwise specified. On services 12 inches or larger in diameter, tees may be substituted for wyes. For new sanitary services, the wye or tee shall have a diameter of 4 inches unless otherwise specified or directed by the Engineer. For existing sanitary services, the wye or tee shall be the diameter of the existing service unless otherwise directed by the Engineer.

Fabricated branches for wyes and tees shall be securely attached to the wall of the pipe in a watertight manner and shall be flush with the inside surface of the pipe. Tee branches shall have their axes perpendicular to the longitudinal axis of the pipe. Wye branches shall have their axes approximately 60 degrees or 45 degrees from the longitudinal axis of the pipe, measured from the bell end. Pipe reinforcement shall not be interrupted beyond a radial distance of 3 inches outside of the fitting.

2700.4.4.2 - Storm Service Fittings

Fittings for storm service connections shall be tees or sockets placed horizontally at the spring line of the pipe, unless otherwise specified or directed by the Engineer. The connection fittings shall be placed flush with the outer limits of a concrete envelope and kept free of concrete to facilitate future connections.

2700.4.5 - Service Construction

2700.4.5.1 - Line and Grade

The point of commencement for laying of building service pipe shall be at the main. Building service pipe shall be laid with the bell end pointing upgrade. Any other procedure shall be followed only with permission of the Engineer.

Sanitary and storm sewer service leads shall have a slope of one- fourth inch per foot where possible. In no case shall there be less than one-eighth inch per foot unless specifically

allowed in Contract Documents. Between the lot line and the sewer main or riser, the sewer shall be laid at a uniform slope not exceeding one-half inch per foot.

2700.4.5.2 - Risers

Risers shall be constructed as shown in the details when directed by or approved by the Engineer. They shall be brought up to an elevation such that the service lateral will be approximately 11 feet to 12 feet below finished grade at property line. Riser pipe shall be laid at approximately a one to one slope to the desired depth. The remaining sewer service lateral will be laid at a minimum slope of 1/4 inch per foot. The top pipe of the riser shall be a 45-degree bend. The end pipe shall be bulkheaded and marked with flagging 2 feet above the top of the riser.

2700.4.5.3 - New Sewer Service

All new sewer service locations shall be installed as shown on the plans or at the center of the proposed lot. If the service is not immediately connected to the house, the location of the stub end shall be marked by the Contractor using a 2" x 2" buried wooden stake placed from the invert upward a minimum of 8 feet. Cost of the plug and location stake shall be incidental to the installation of the service.

2700.4.5.4 - Reconnected Sewer Service

The Contractor shall be responsible to locate the existing underground sewer services. The plans will supply the Contractor with the approximate locations as available to the Owner. If the initial excavation for the location of existing building sewers and water services fails to uncover the existing services, the Contractor, at his own expense, shall explore a distance of 6 feet in each direction of the initial excavation, or a total of 12 feet, immediately in back of and parallel to the curb, or along the water main. If the existing building sewers or water services cannot be located within these limits, and additional trenching is required, the Contractor shall be paid for an "Exploratory Excavation".

Where a sewer main is to be abandoned and replaced, each existing service, whether active or apparently inactive, shall be provided with an outlet to the new sewer. Where a service has been identified as abandoned, the Contractor shall omit a new outlet.

2700.4.5.5 - Capping of Services

All connection fittings and ends of services shall be sealed with a watertight stopper having the same joint as the spigot ends of pipe on the main sewer. The use of fittings shall be considered incidental to the cost of installation of sewer pipe. Any connections or adapters

necessary to connect new service to existing service shall be considered incidental to the installation of the service.

2700.4.5.6 - Exploratory Excavation

An exploratory excavation for the existing service will be required after the Contractor, at his own expense, has explored a distance of 6 feet in each direction of the initial excavation, or a total of 12 feet, immediately in back of and parallel to the curb, or along the water main. If the existing building sewers or water services cannot be located within these limits, and additional trenching is required, the Contractor shall be paid for an "Exploratory Excavation".

All exploratory excavations shall be made on the service near its connection to the main so as to minimize the loss of any concrete curb and gutter. Excavations or services which are separated by a distance of 5 feet or less shall be considered and paid for as one Exploratory Excavation regardless of the number of services located in that 5 foot length.

2700.4.5.7 – Tunneling of Service

In locations, as determined by the Engineer, where the existing sanitary sewer service is in conflict with an existing tree, the Contractor may be directed to tunnel this service under the existing tree. The excavation on the street side of the service shall be located to maintain a safe zone of five (5) feet radial from the trunk of the tree. A sheeted hole shall be constructed on the private property side of the sidewalk over the service. The excavation on the private property side of the sidewalk shall be kept to a minimum with any unnecessary damage, as determined by the Engineer, repaired by the Contractor at their own cost. After excavation has been completed for the tunneling equipment and the sheeted hole but prior to the tunneling of the service, the Contractor shall determine the grade of the existing sanitary sewer service. The Contractor shall tunnel a new service under the tree to match the existing slope of the service and reconnect to the existing service.

2700.4.5.8 – Relocating of Service

In locations, as determined by the Engineer, where the existing sanitary sewer service is in conflict with an existing tree, the Contractor may be directed to relocate this service around the existing tree. The excavation around the tree shall be located to maintain a safe zone of five (5) feet radial from the trunk of the tree. The Contractor shall determine the grade of the existing sanitary sewer service prior to the relocating the service. The relocated service shall be constructed with 45-degree bends at all bend locations. The Contractor shall excavate at the old

wye or tee and plug after the sanitary sewer has been relocated. The plugging of the existing wye or tee shall be considered incidental to the relocating of the sanitary sewer service.

2700.5 - TESTING

2700.5.1 - General

All sanitary sewer installed under this contract shall pass the water infiltration test, low-pressure air test and/or the deflection test as ordered by the Engineer as described within this section. The cost of testing shall be considered incidental to the sanitary sewer or storm sewer construction. All tests to be performed by the Contractor must be witnessed by the Engineer. The Contractor shall notify the Engineer twenty-four hours in advance for any testing to be completed.

2700.5.2 - Deflection Test

Following the completed installation of sanitary sewer, a deflection test shall be performed by the Contractor as directed and supervised by the Engineer.

The entire length of the installed main line pipe shall be tested for acceptance with an approved go-no-go acceptance-testing device (mandrel). This mandrel shall be a rigidly constructed cylinder or other approved shape which will not change shape or size when subjected to forces exerted on it by the pipe wall. The diameter of the mandrel shall be equal to or more than 95% of the normal inside diameter of the round pipe as shown in the following table:

MANDREL DIMENSION	
Nominal Size	**Minimum Diameter (Inches) 5%**
8	7.31
10	9.25
12	11.13
15	14.01

The Contractor shall furnish the testing device, all materials, equipment and labor for making this acceptance test, using standard practices.

2700.5.3 - Water Infiltration Test

The rate of infiltration of water into the sewer project, including appurtenances, shall not exceed 200 gallons per day per inch diameter per mile of sewer. The infiltration between any two adjacent manholes shall not be greater than 250% of the allowable infiltration rate.

The infiltration allowance for manholes shall be computed using the total number of vertical feet of manhole expressed as the equivalent diameter sewer.

The maximum allowable infiltration, expressed in gallon per hour for various pipe and manhole sizes is shown in the following table:

ALLOWABLE LIMITS OF INFILTRATION BASED ON 200 GAL./IN. DIA./MILE/DAY			
Diameter of Sewer Inches	**Infiltration per ft. per hr. Gallons**	**Diameter of Sewer Inches**	**Infiltration per ft per hr. Gallons**
4	0.0063	21	0.0332
6	0.0095	24	0.0378
8	0.0126	27	0.0426
10	0.0158	30	0.0474
12	0.0190	36	0.0568
15	0.0237	42	0.0663
18	0.0284	48	0.0786
42" Diameter Manhole - 0.0663 Gal. per vertical ft. per hr. **48" Diameter Manhole - 0.0758 Gal. per vertical ft. per hr.**			

2700.5.4 - Low Pressure Test

Following the completed installation of sanitary sewer, a low-pressure air test shall be performed by the Contractor as directed and supervised by the Engineer. The low-pressure air test procedures shall be made in accordance with standard practices as described below.

(1) The sewer line should be flushed and cleaned prior to conducting the low-pressure air test.

(2) Isolate the section of sewer line to be tested by means of inflatable stopper test plugs.

(3) Connect the portable air control source. The air equipment should consist of necessary valves and pressure gages to control the rate at which air flows into the test section and to enable monitoring of the air pressure within the test section.

(4) Add air to the test section to achieve 4.0 psi. Maintain pressure and stabilize the line for a few minutes.

(5) Disconnect the air supply and begin the test when the air pressure drops to 3.5 psi.

(6) Using a stopwatch, measure the time it takes for a pressure drop from 3.5 psig to 2.5 psig. If the time is equal to or greater than the times indicated in the table, the pipeline shall be deemed acceptable.

Refer to the following chart for allowable leakage times.

LOW PRESSURE AIR TEST ALLOWABLE TIME

ALLOWABLE TIME (MIN/SEC)

	Pipe Diameter "D" in Inches								
Pipe Length	4	6	8	10	12	15	18	21	24
50	0:09	0:20	0:38	0:55	1:19	2:04	2:58	4:03	5:27
100	0:18	0:40	1:11	1:50	2:38	4:08	5:56	8:05	10:39
150	0:26	0:59	1:46	2:45	3:58	6:11	8:30	9:55	11:20
200	0:35	1:19	2:21	3:40	5:17	7:05	8:30	9:55	11:20
250	0:44	1:39	2:56	4:35	5:40	7:05	8:30	9:55	11:50
300	0:53	1:59	3:31	4:43	5:40	7:05	8:30	10:52	14:12
350	1:02	2:19	3:47	4:43	5:40	7:05	9:19	12:41	16:34
400	1:10	2:38	3:47	4:43	5:40	7:24	10:39	14:30	18:56
450	1:19	2:50	3:47	4:43	5:40	8:19	11:59	16:18	21:18
500	1:28	2:50	3:47	4:43	5:55	9:15	13:19	18:07	23:40

2700.5.5 – Forcemain Testing

All forcemain shall be tested in accordance with Section 2600.5.3 – Pressure Leak Test of these specifications at a pressure of 100 psi. The pressure/leak test shall be conducted after satisfactory installation of forcemain.

2700.5.6 – Sanitary Sewer Televising

All sanitary sewer lines shall be televised with all said televising costs included in the related sanitary sewer item. When sewer line flows are above the minimum requirements (generally not more than 1/4 of the pipe diameter) or inspection of the complete periphery of the pipe is necessary to effectively conduct the inspection and sealing operations, one or more of the following methods of flow control shall be used at no extra cost to the City:

1. Plugging or Blocking: A sewer line plug shall be inserted into the line at a manhole upstream from the section to be inspected, tested and/or sealed. The plug shall be so designed that all or any portion of the sewage flows can be released. During the inspection portion of the operation, flows shall be shut off or substantially reduced in order to properly inspect the pipe at the invert. After the inspection is complete, flows shall be restored to normal or not more than 1/3 of the pipe diameter during the joint testing and joint sealing operation.

2. Pumping and Bypassing: Where pumping is required, in the opinion of the City, to assure completion of the inspection and sealing work, the Contractor will be required to furnish pumping equipment, conduits, etc. All costs for flow control, temporary pumping, etc., shall be inclusive to testing and shall be included in the unit price bid for the related sanitary sewer item. No bypassed wastewaters will be allowed to be discharged to surface drainage facilities.

3. Liability: Contractor shall be liable for damages to private or public property which may result from sewer flow control operations.

4. The television camera used for the inspection shall be one specifically designed and constructed for such inspection. Lighting for the camera shall be suitable to allow a clear picture for the entire periphery of the pipe. The camera shall have a minimum resolution of 600 lines and shall provide a color picture. Picture quality and definition shall be to the complete satisfaction of the Engineer and if unsatisfactory, equipment shall be removed and no payment made for unsatisfactory inspection. The camera shall be moved through the line in either direction at a uniform slow rate by means of cable winches at each manhole. Contractor shall provide to the City a DVD record of the inspection as well as a type written report of the inspection.

5. Measurement for location of defects as shown on the contract drawings shall be at the ground level by means of a meter device. Marking on cable or the like which would require interpolation for depth of manhole, etc., will not be allowed. Measurement meters shall be accurate to 0.2 of a foot. A measuring target (or the sealing packer) in front of the television camera shall be used as an exact measurement reference point and the meter reading shall show this exact location of the measurement reference point.

2700.6 - MEASUREMENT AND PAYMENT

2700.6.1 - Sanitary and Storm Sewer

The quantity of sanitary and storm sewer shall be paid per type and class in linear feet per bid diameter and depth, as measured from the existing ground to the flowline of the proposed pipe, as measured along the centerline of the pipe through manholes, junctions, and fittings. This shall be full compensation for excavation, furnishing pipe and fittings, installing pipe and fittings, backfilling, compacting, testing, labor, and incidentals necessary to complete the work.

2700.6.2 - Manhole Masonry

The quantity of manhole masonry shall be paid per linear feet of build as measured from the lowest invert to the bottom of the casting. This shall be full compensation for excavation, furnishing all materials, including all masonry, connections, installation, backfilling, testing, labor, and incidentals necessary to complete the work.

2700.6.3 - Inlet Masonry

Constructing catch basins and inlets shall be measured and paid for at the contract unit price per each. This unit price shall be full compensation for excavation, furnishing all materials, including all masonry, connections, installation, backfilling, labor, and incidentals necessary to complete the work to finished grade.

2700.6.4 - Inlet Lead

The quantity of inlet lead shall be paid for per diameter in linear feet as measured along the centerline of the pipe from center of manhole to the center of inlet. This shall be full compensation for excavation, furnishing, installing, backfilling, labor, and incidentals necessary to complete the work.

2700.6.5 - Remove and Reset Inlet

The Contractor shall be paid the unit price for remove and reset inlet, as shown in the Contractor's Bid Form. This price shall be full compensation for all labor, tools, and equipment necessary to salvage and reset the existing inlet lead, masonry, and casting.

2700.6.6 - Remove Existing Inlet Lead

The quantity of removing inlet lead shall be measured and paid for per linear feet as removed. This shall be full compensation for excavating, removing, backfilling, disposal, labor, and incidentals necessary to complete the work.

2700.6.7 - Sanitary Sewer Service

The quantity of sanitary sewer service shall be paid for per linear feet as measured along the pipe centerline from the main to the end at the property line, including the riser sections, fittings, wye or tee. This shall be full compensation for furnishing, excavating, installation, backfilling, compacting, labor, and incidentals necessary to complete the work.

2700.6.8 - Remove and Replace Sanitary Service

The quantity of remove and replace sanitary service shall be paid for as Sanitary Sewer Service per linear feet as measured along the pipe centerline from the main to the connection, including any adapters, riser sections, fittings, wyes or tees. This shall be full compensation for furnishing, excavating, reinstallation, backfilling, compacting, labor, and incidentals necessary to complete the work.

2700.6.9 - Manhole/Inlet Castings

The quantity of manhole or inlet castings shall be measured and paid for per each unit installed, and shall be full compensation for excavation, furnishing, installation, backfilling, compacting, labor, and incidentals necessary to complete the work.

2700.6.10 - Exploratory Excavation

Payment for Exploratory Excavation shall be on a per each basis as shown on the Bid Form and shall be full payment for excavating a safe and adequate inspection hole to uncover the questionable service, and for properly backfilling and compacting the hole after the Engineer has inspected the service.

2700.6.11 - Polystyrene Insulation Board

Polystyrene insulation board shall be measured and paid for on the per each basis as shown in the Bid Form. The unit of measurement shall be each 4' x 8' x 2" thick sheet or by the square foot of 2-inch thick insulation. Payment shall be full compensation for furnishing and installing the insulation board as described or directed by the Engineer.

2700.6.12 - Drop Pipe

The quantity of drop pipe shall be measured and paid for in linear feet, from invert to invert, and shall be full compensation for excavation, furnishing, installing, connectors, backfilling, labor, and incidentals necessary to complete the work.

2700.6.13 - Rock Excavation

Rock excavation shall be measured and paid for in accordance with WSSHSC Section 205.5.1 by the cubic yard. If the Proposal fails to include a bid item for Rock Excavation and material is uncovered that is so classified, excavation of the rock shall be paid separately at the Contract unit price for Unclassified Excavation plus $8.00 additional per cubic yard.

2700.6.14 - Reinforced Concrete Pipe Adapter

Payment for the Reinforced Concrete Pipe Adapter shall be paid as storm or sanitary sewer for per type and class of linear feet per bid diameter and depth of storm or sanitary sewer measured along the centerline of the pipe. This shall be full compensation for excavation, furnishing, installing, backfilling, compacting, testing, labor, and incidentals to complete the work.

2700.6.15 - Crushed Stone Bedding Material

Payment for crushed stone bedding material shall be paid per cubic yard in place in the trench. Payment shall be limited to a width no greater than 1 foot beyond the pipe on each side, unless otherwise directed by the Engineer.

2700.6.16 - Remove Manhole Masonry

The quantity of remove manhole masonry shall be measured and paid for per each basis as removed. This shall be full compensation for excavating, removing, backfilling, disposal, labor, and incidentals necessary to complete the work.

2700.6.17 - Remove Inlet Masonry

The quantity of remove inlet masonry shall be measured and paid for per each basis as removed. This shall be full compensation for excavating, removing, backfilling, disposal, labor, and incidentals necessary to complete the work.

2700.6.18 – Tunnel Sanitary Sewer Service

The quantity of tunnel sanitary sewer service shall be measured and paid for per linear feet as measured along the pipe centerline from the main to the connection, including any adapters, riser sections, fittings, wyes or tees. This shall be full compensation for furnishing, excavating, tunneling, shoring, reinstallation, backfilling, compacting, labor, and incidentals necessary to complete the work.

2700.6.19 – Relocate Sanitary Sewer Service

The quantity of relocate sanitary service shall be paid for as Sanitary Sewer Service per linear feet as measured along the pipe centerline from the main to the connection, including any adapters, riser sections, fittings, wyes or tees. This shall be full compensation for furnishing, excavating, reinstallation, plugging the existing wye or tee, backfilling, compacting, labor, and incidentals necessary to complete the work.

2700.6.20 – Core Drilling of Existing Manholes

The core drilling of the existing sanitary manhole, as indicated on the plans, in the specifications, or directed by the Engineer, shall be considered incidental to the sanitary sewer construction and no additional compensation shall be made.

2700.6.21 – Flexible Pipe-to-Manhole Boot

All new sanitary sewer manholes and existing sanitary sewer manholes that have been core drilled shall have a flexible pipe-to-manhole boot installed. The supplying and installation of the flexible pipe-to-manhole boot shall be considered incidental to the sanitary sewer construction and no additional compensation shall be made.

2700.6.22 – Manhole Chimney Seals/Storm Inlet Chimney Seals

All costs associated with installation of manhole chimney seals and storm inlet chimney seals shall be considered incidental to the unit price bid for the respective manhole or storm inlet.

2700.7 - DETAILS

MH DIMENSIONS		
SIZE PIPES	MH DIA.	WALL THICKNESS
8"-30"	48"	5"
36"	60"	6"
42"-48"	72"	7"
54"-60"	84"	8"
72"	96"	9"

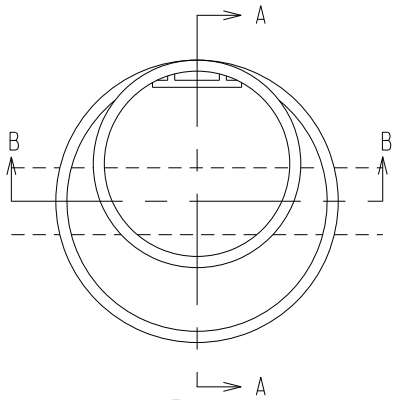

PLAN

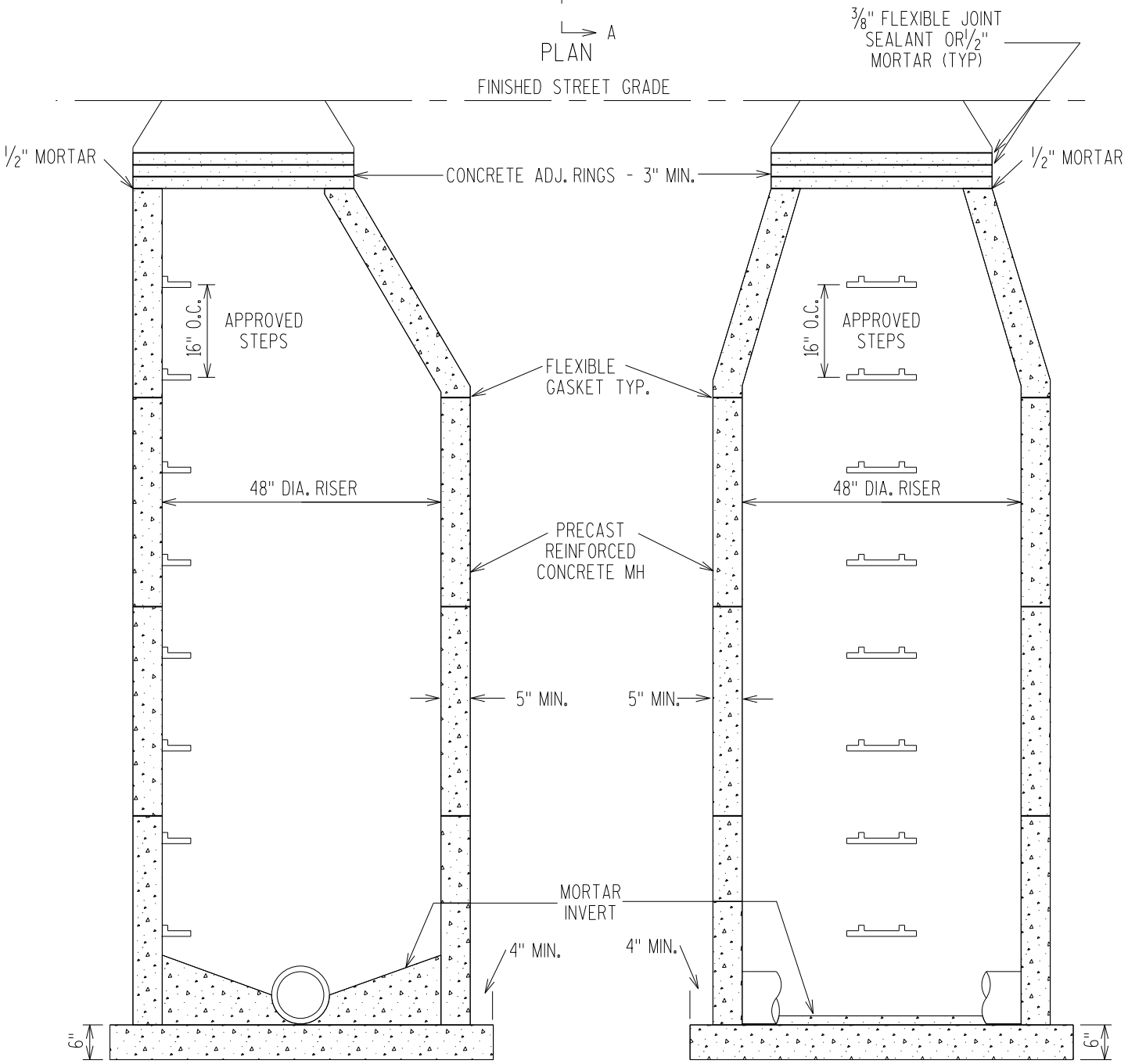

SECTION A-A

SECTION B-B

STANDARD MANHOLE

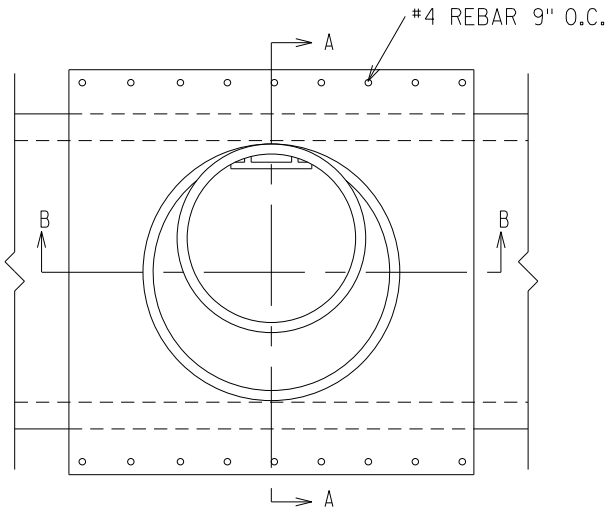

PLAN

MH DIMENSIONS		
SIZE PIPES	MH DIA.	WALL THICKNESS
8"-30"	48"	5"
36"	60"	6"
42"-48"	72"	7"
54"-60"	84"	8"
72"	96"	9"

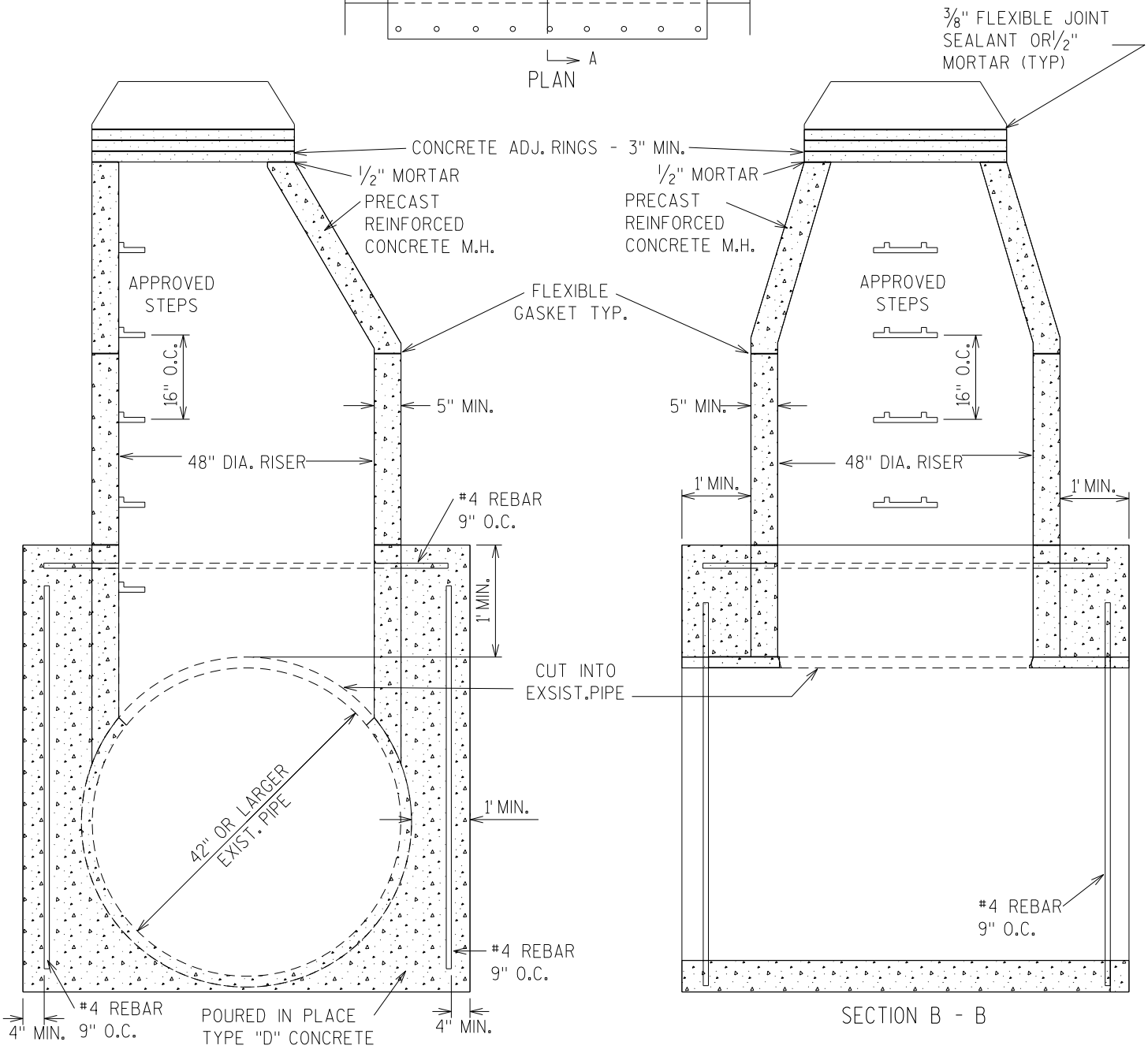

SADDLE MANHOLE

MH DIMENSIONS		
SIZE PIPES	MH DIA.	WALL THICKNESS
8"-30"	48"	5"
36"	60"	6"
42"-48"	72"	7"
54"-60"	84"	8"
72"	96"	9"

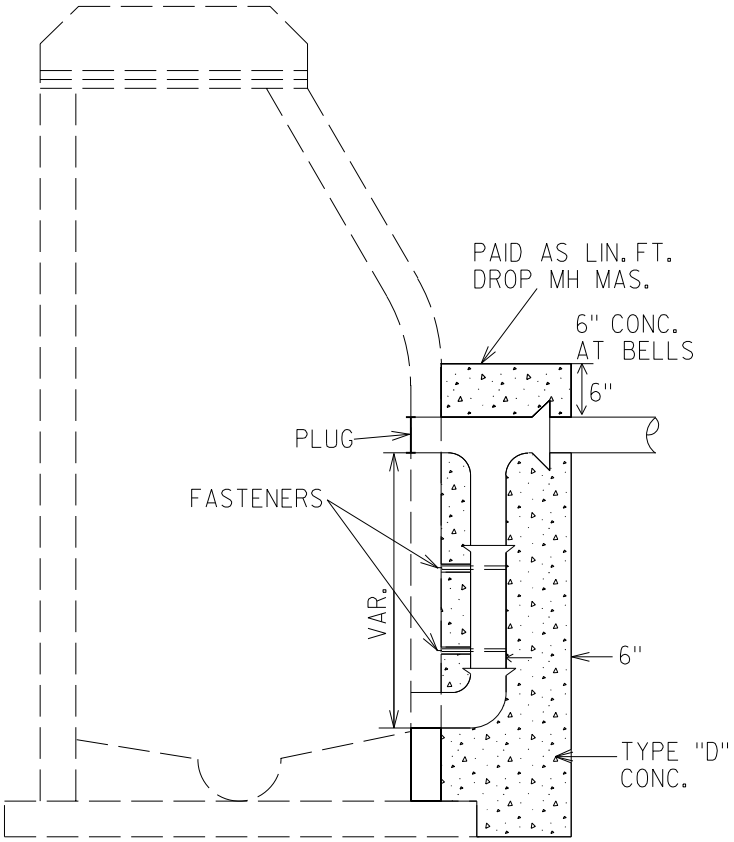

OUTSIDE DROP

NOTE: ALL OUTSIDE DROP PIPING SHALL BE CLASS 52 D.I., SDR PVC, OR RIGID PIPING APPROVED BY THE ENGINEER.

ATTACH DROP TO MANHOLE WALL WITH STRAPPING ANCHORED WITH MANONRY FASTENERS.(MIN.2 STRAPS PER DROP) SHIM AS NEEDED

DROP MANHOLE

MH DIMENSIONS		
SIZE PIPES	MH DIA.	WALL THICKNESS
8"-30"	48"	5"
36"	60"	6"
42"-48"	72"	7"
54"-60"	84"	8"
72"	96"	9"

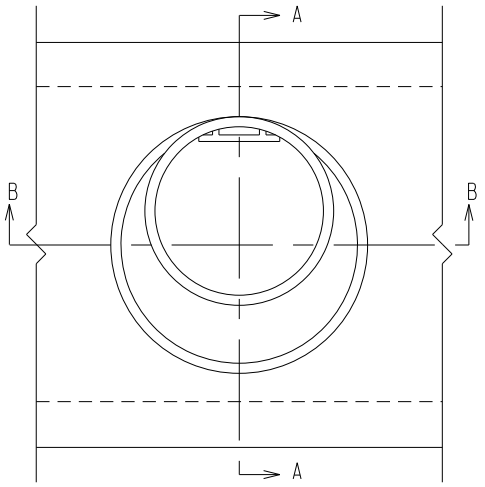

PLAN

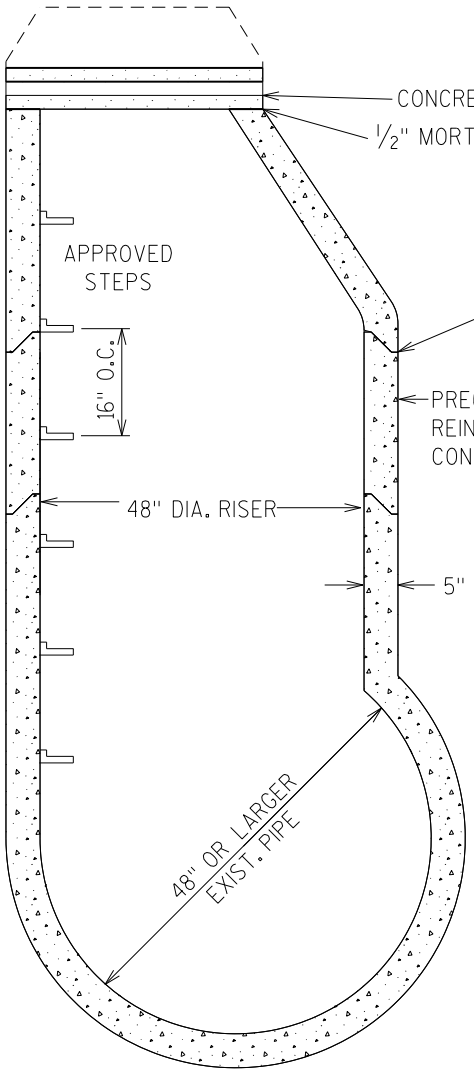

SECTION A - A

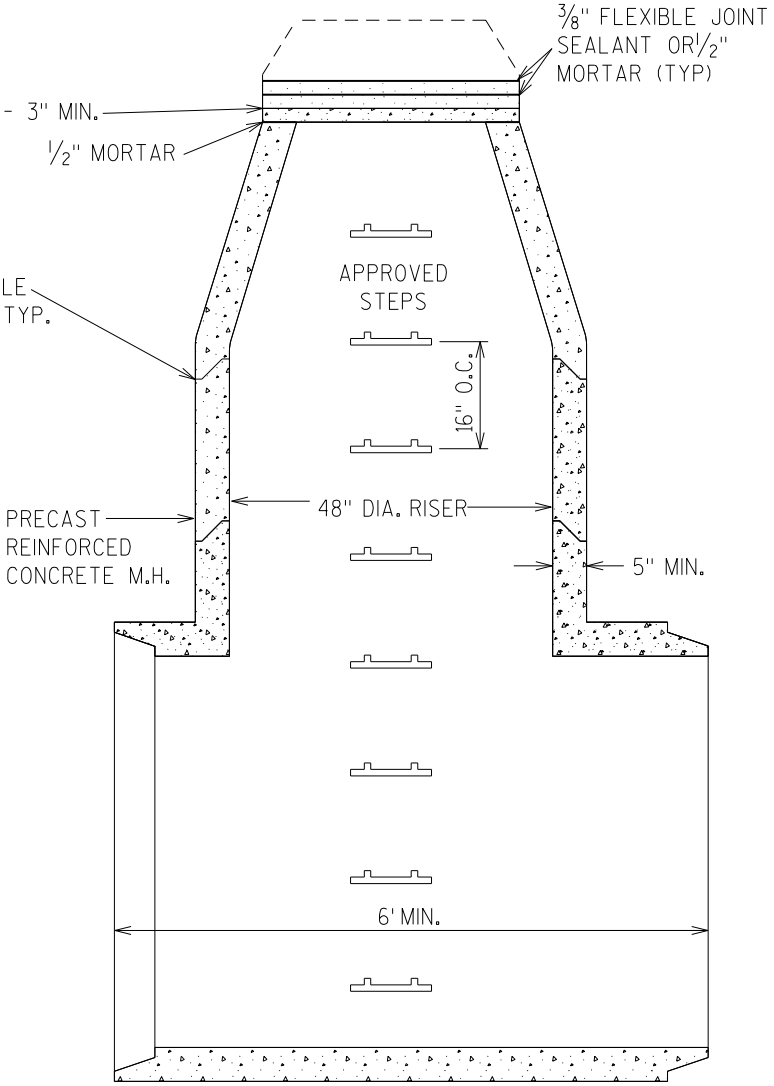

SECTION B - B

PRECAST MANHOLE TEE

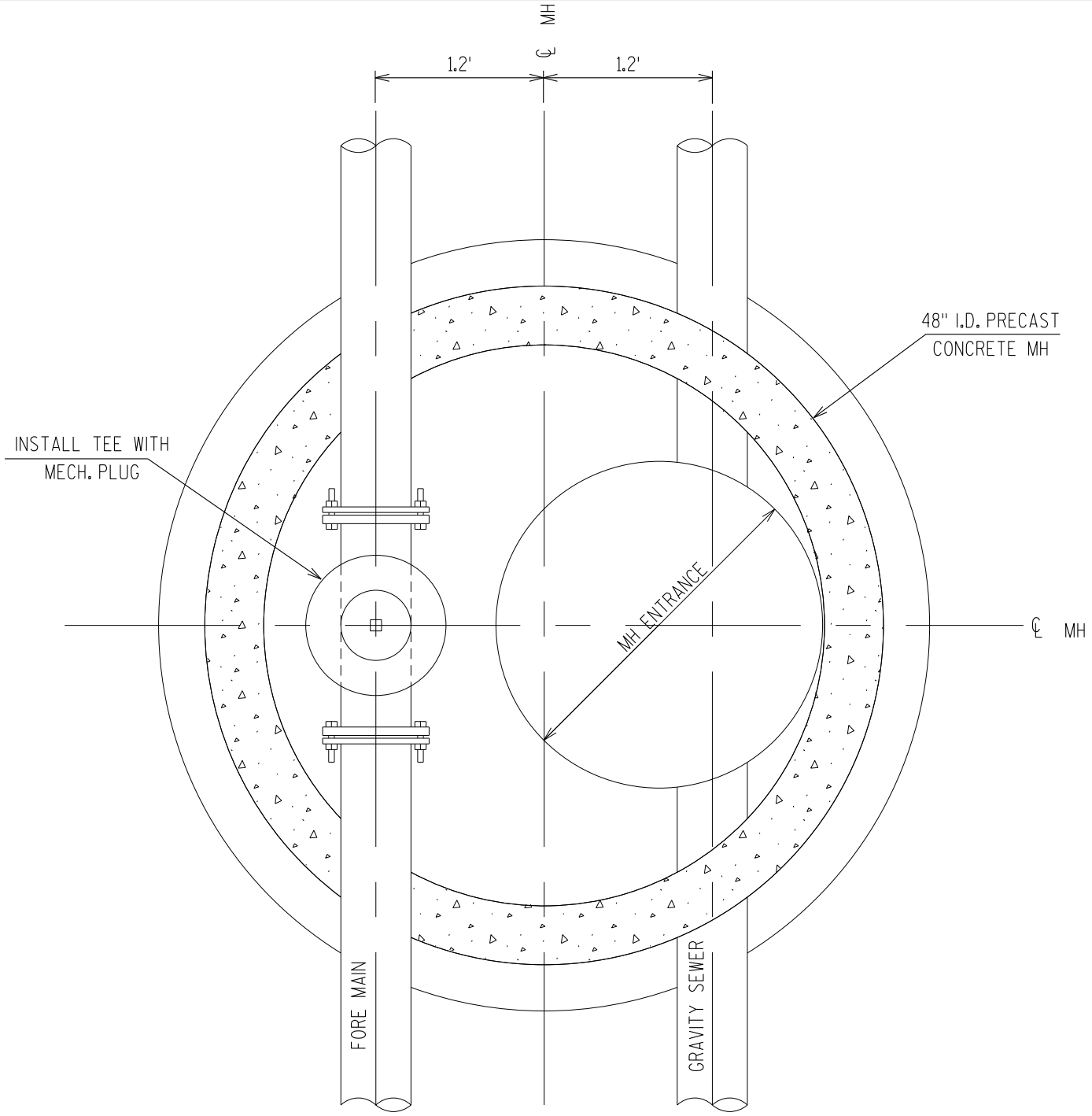

NOTES: MH ENTRANCE IS TO BE LOCATED DIRECTLY OVER GRAVITY SEWER.
DO NOT CONSTRUCT STEPS IN MH.
TOP OF FORCE MAIN IS 2' ABOVE INVERT OF GRAVITY SEWER.

FORCE MAIN CLEANOUT MH

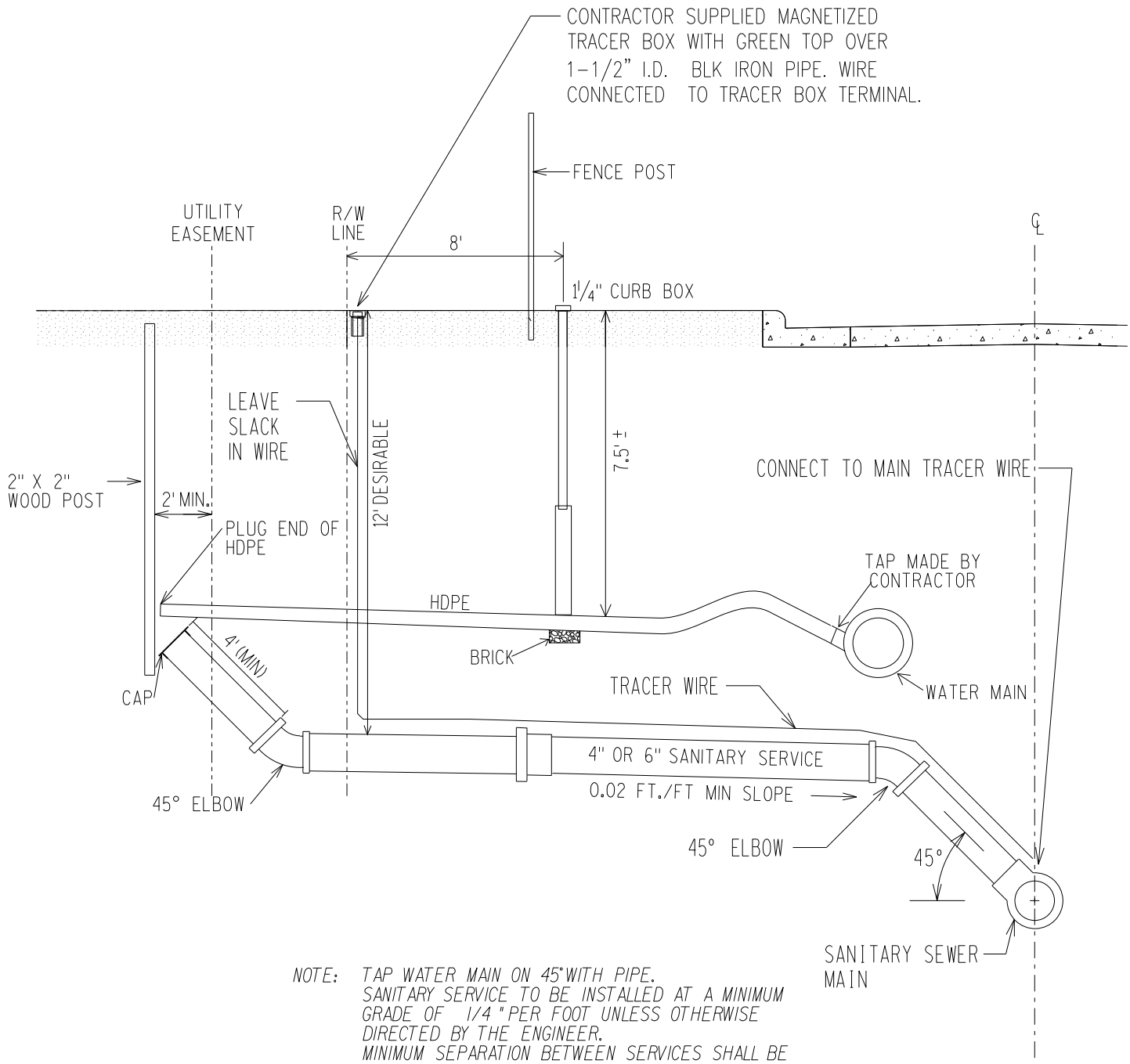

NOTE: TAP WATER MAIN ON 45° WITH PIPE.
SANITARY SERVICE TO BE INSTALLED AT A MINIMUM GRADE OF 1/4" PER FOOT UNLESS OTHERWISE DIRECTED BY THE ENGINEER.
MINIMUM SEPARATION BETWEEN SERVICES SHALL BE 12" VERTICAL AND 18" HORIZONTAL.
SERVICES SHALL BE EXTENDED A MINIMUM OF 2' BEYOND THE UTILITY EASEMENT.

SANITARY SERVICE & RISER DETAIL

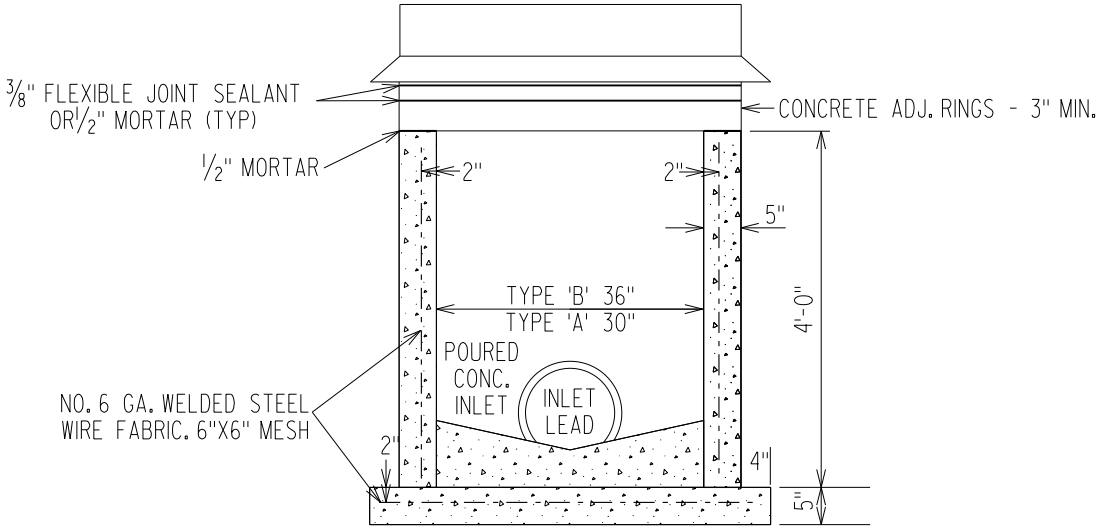

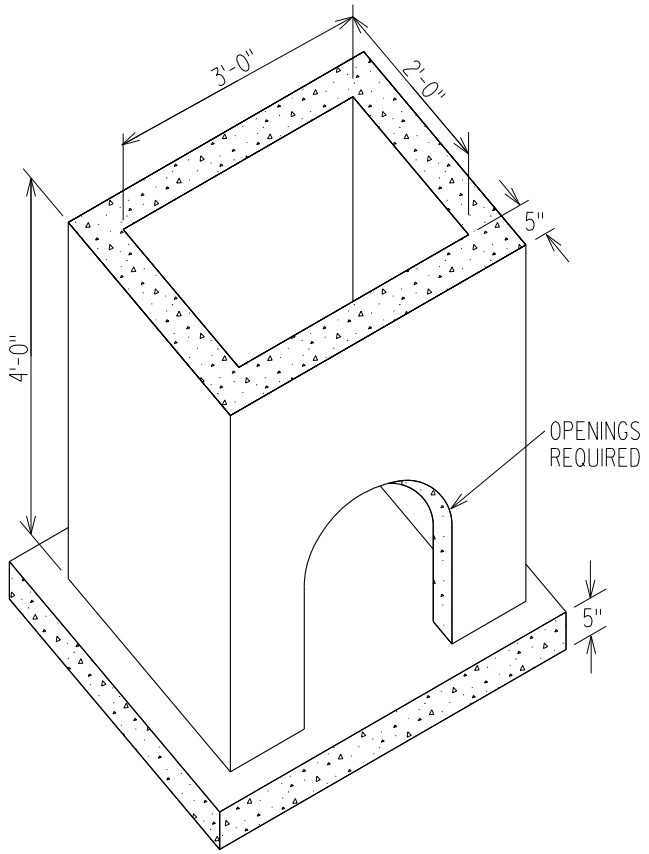

TYPE 'B'

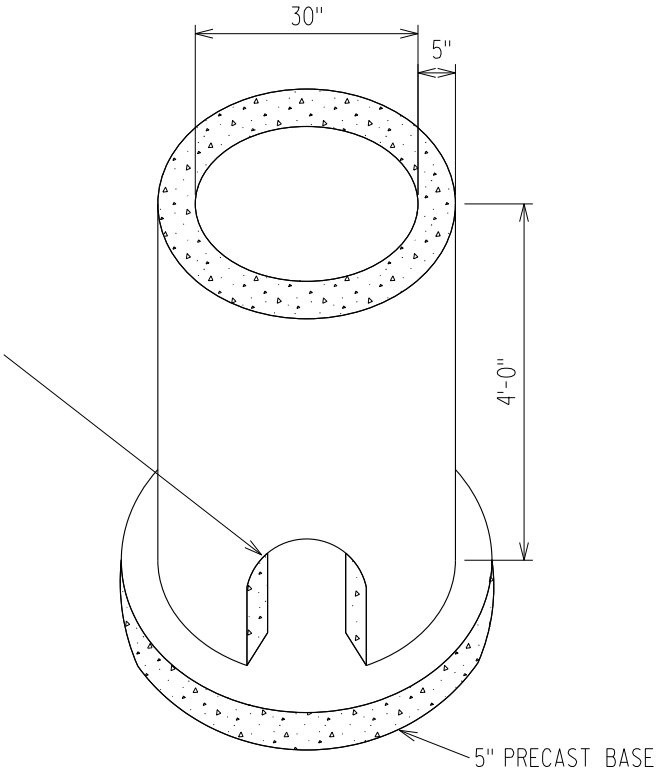

TYPE 'C'

PRECAST REINFORCED CONCRETE INLET

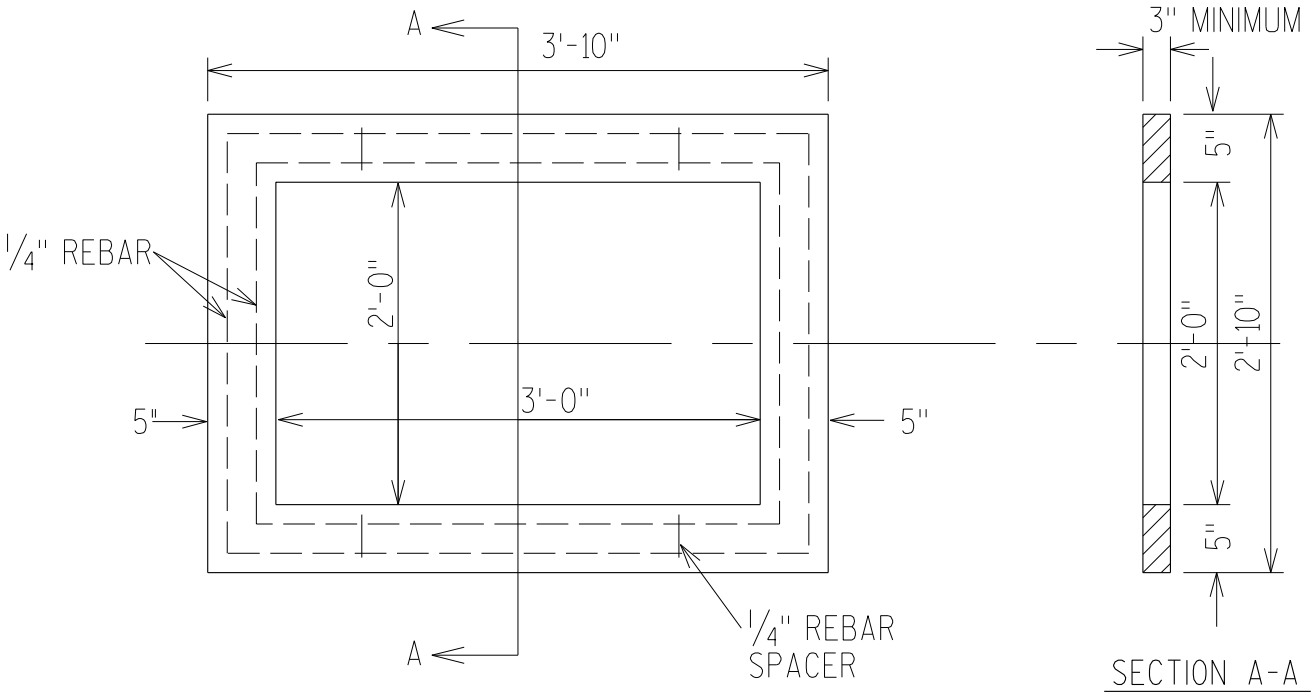

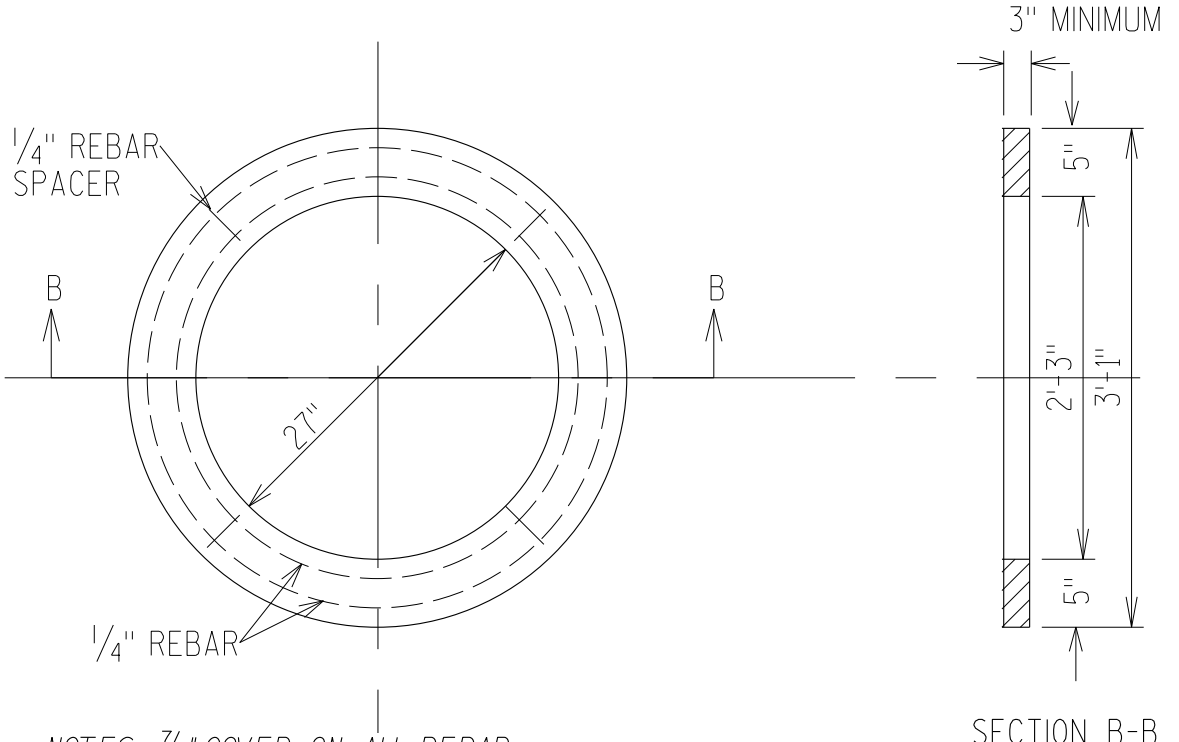

NOTES: 7/8" COVER ON ALL REBAR.
ALL REBAR TIED WITH WIRE TIES.
CONCRETE SHALL TEST 4000 LBS/SQ.IN.AT 28 DAYS.

PRECAST ADJUSTMENT RINGS

WEIGHT=510 LBS.

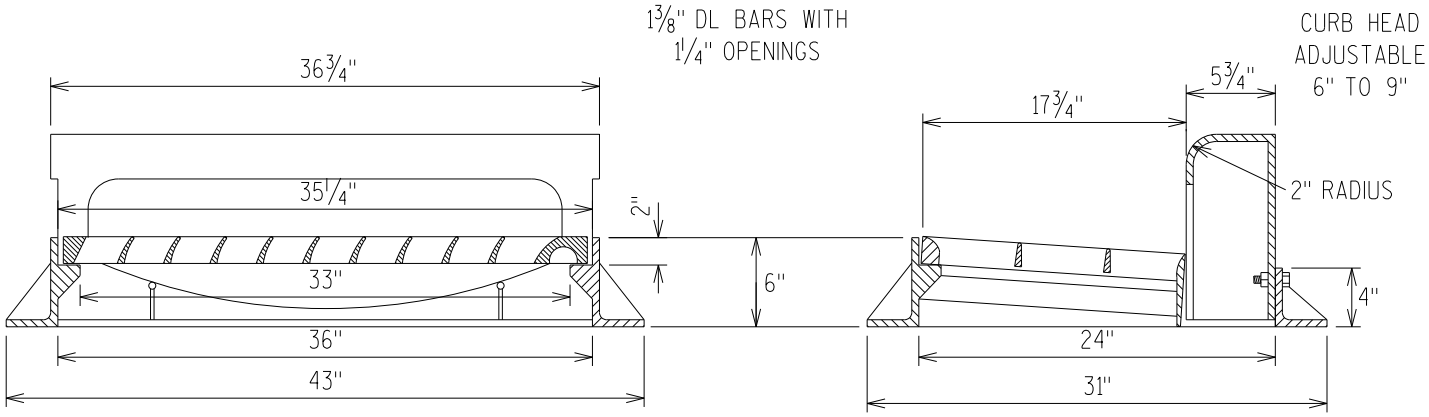

TYPE B

NEENAH R - 3067 - L OR V, OR APPROVED EQUAL.

(NOTE: VANE STYLE SHALL BE NEENAH 3067 - V OR APPROVED EQUAL)

WEIGHT = 330 LBS.

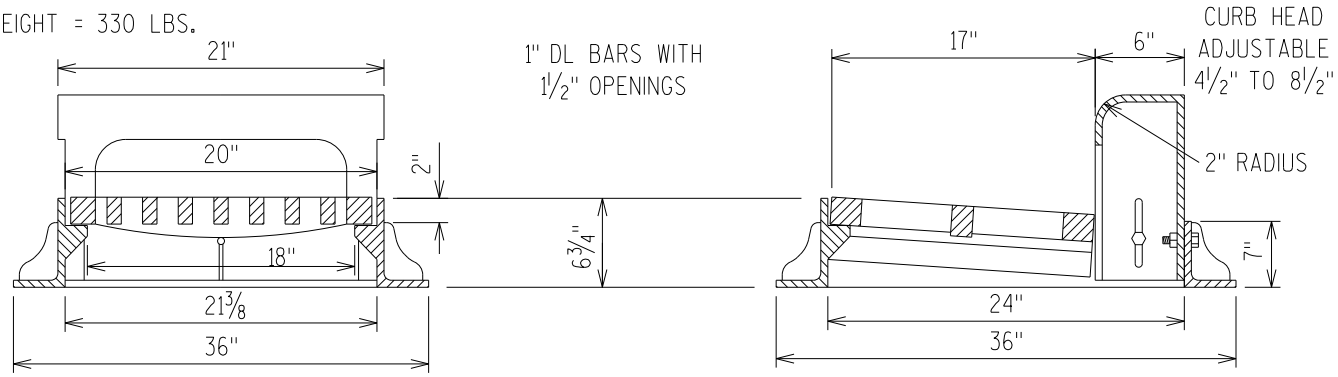

TYPE C

NEENAH R - 3065 - L OR V, OR APPROVED EQUAL.

WEIGHT = 460 LBS.

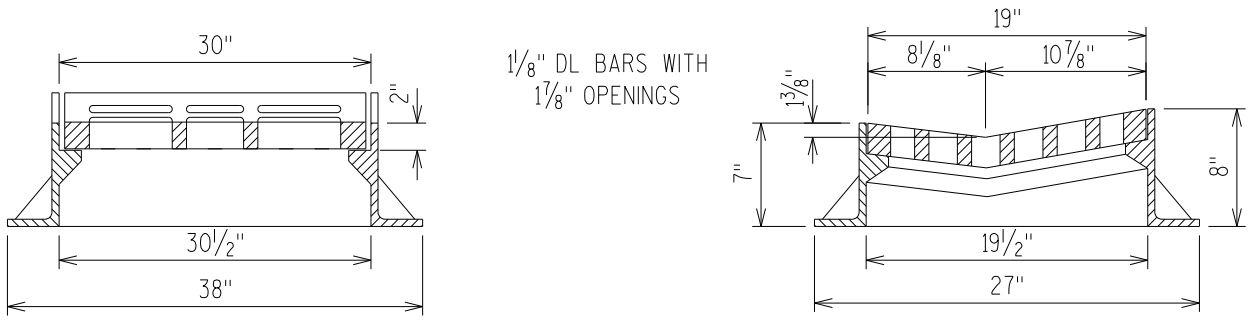

TYPE D

NEENAH R - 3511 OR APPROVED EQUAL.

INLET CASTINGS

CHECKERED TOP

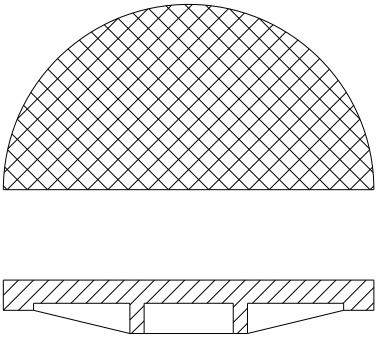

TYPE A

NEENAH R- 1642

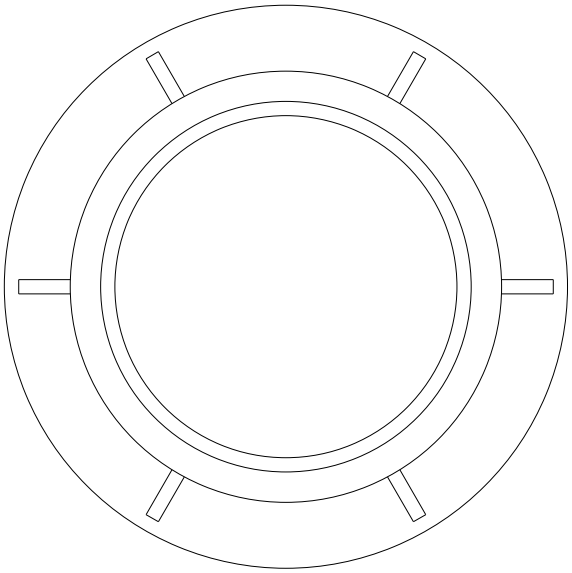

GRATE

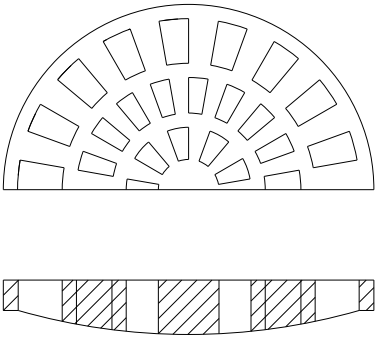

TYPE C

NEENAH R- 2501

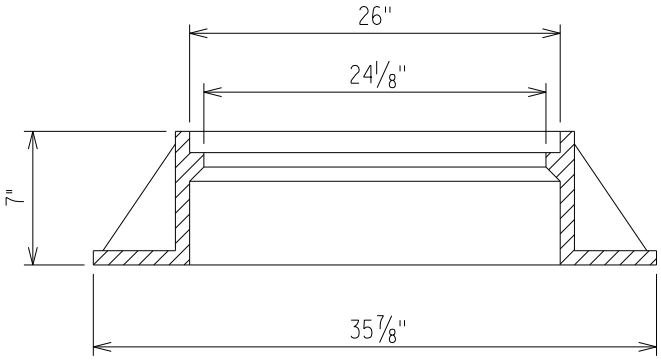

MANHOLE CASTING AND LIDS

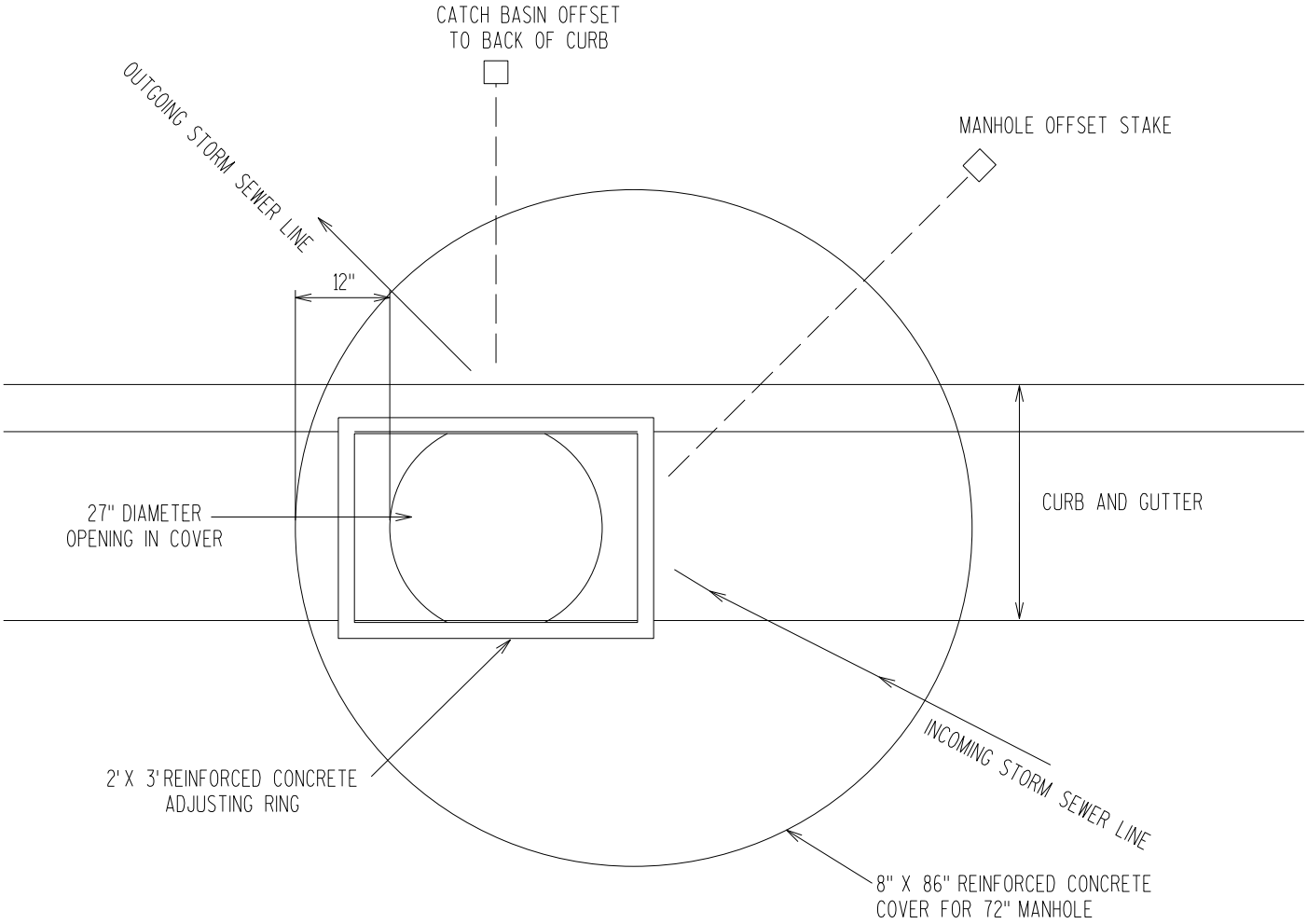

NOTES:

TO MANUFACTURER:

1. BUILD COVER WITH 27" DIAMETER OFFSET HOLE.
2. PLACE STEPS ON DOWNSTREAM SIDE OF MANHOLE TO ALIGN WITH CURB AND GUTTER.

TO CONTRACTOR:

1. SET CENTER OF MANHOLE AT STAKED OFFSET.
2. ALIGN MANHOLE CUTOUTS WITH STORM SEWER PIPE.
3. SET COVER TO ALIGN 27" OPENING WITH STAKED CATCH BASIN OFFSET.

TO SURVEYOR:

1. STAKE CATCH BASIN AT SAME TIME AS MANHOLE IS STAKED:

CATCH BASIN MANHOLE INSTALLATION PROCEDURES

THIS PAGE INTENTIONALLY LEFT BLANK

CITY OF ALTOONA

S P E C I F I C A T I O N S

DIVISION 2710 – LOW PRESSURE SANITARY SEWER

2710.1 - DESCRIPTION

2710.1.1 - General

Work in this section shall consist of the installation of HDPE pressure sanitary sewer as shown on the Plans and Details as provided by the contract. This work shall consist of the construction of pressure sanitary sewer and building service pipelines utilizing plant fabricated pipe and other appurtenant materials, installed for conveyance of wastewater. The work includes the relocation or adjustment of existing facilities as may be specified in the Contract.

The labor, materials, and equipment provided by the Contractor shall be of the quality, quantity, and condition necessary to complete the work in a **top quality manner**.

All references to Specifications of AASHTO, ASTM, ANSI, AWWA, etc. shall mean the latest published edition or supplement available on the date of advertisement for bids.

2710.2 - MATERIALS

2710.2.1 - General Requirements

All materials required for this work shall be new material conforming to requirements of the referenced specifications for the class, kind, type, size, grade and other details indicated in the Contract. Unless otherwise indicated, all required material shall be furnished by the Contractor. If any options are provided for, as to type, grade or design of the material, the choice shall be limited as may be stipulated in the Contract Drawings or Specifications.

All manufactured products shall conform in detail to such standard design drawings as may be referenced or furnished in the Contract Drawings. Otherwise, the City may require advance approval of material suppliers, product design, or other unspecified details as it deems desirable for maintaining adopted standards.

2710.2.2 - HDPE Pipe and Fittings

Pressure sewer pipe less than 4-inch shall be polyethylene pipe conforming to the requirements of ASTM D2239 or D3035 and shall have a minimum working pressure of 200 psi at 73 deg. F., DR11. Joints and fittings shall be butt heat fusion type, ASTM D3261.

Pipe shall be new or stored for a period of time that does not exceed the manufacturer's recommended maximum period of exposure, regardless of the method of storage.

The DR number and pressure rating specified above shall be considered a minimum. Provide stronger class pipe if required by loads imposed by directional drilling pulling operation.

Shop drawings for HDPE pipe must specify minimum allowable pipe deflection radius.

Reference Standards - American Society for Testing and Materials (ASTM)

1. ASTM D638 – Tensile Method for Tensile Properties of Plastics
2. ASTM D790 – Test Materials for Flexural Properties of Unreinforced and Reinforced Plastics and Electrical Insulating Materials
3. ASTM D3035 – Polyethylene (PE) Plastic Pipe (DR-PE) Based on Controlled Outside Diameter
4. ASTM D3261 – Butt Heat Fusion Polyethylene (PE) Plastic Fittings for Polyethylene Plastic Pipe and Tubing
5. ASTM D3350 – Polyethylene Plastic Pipe and Fittings Material
6. ASTM F714 – Polyethylene (PE) Plastic Pipe (SDR-PR) Based on Outside Diameter

2710.2.3 - HDPE Transition Couplings and Adapters

Transition couplings 2-inch and smaller shall consist of HDPE by threaded stainless steel connections. The coupling shall include a stainless steel transition compression ring with o-ring seal. Adapters shall have a pressure rating equal to that of the mating pipe. HDPE shall be plain end for butt fusing. Coupling shall be manufactured by Central Plastics, Inc. or equal.

All bolts to be used on adapters and couplings shall be supplied with zinc anode caps conforming to ASTM B-418 for regular anode size.

2710.2.4 - Ball Valves

Ball Valves up to 2-inches shall be bronze or stainless steel one piece body, chrome plated brass ball, Teflon seats and stuffing box ring, lever handle, solder or threaded ends. PVC ball valves are not acceptable.

2710.2.5 - Pressure Sewer Services and Fittings

Pressure sewer services shall conform to the same requirements for HDPE pipe and fittings.

Tapping Tees with Electrofusion Saddle shall be manufactured by Central Plastics Company or equal and shall conform to the requirements for Water Pipe Materials and Fittings as specified.

Curb Stops shall have threaded connections for use with HDPE adapters.

Curb Boxes shall be magnetized locator wire boxes as specified elsewhere and shall be adjustable up and down for a minimum of 7 feet of cover.

2710.2.6 – Bedding and Backfill

All bedding and backfill shall meet the requirements as set forth in Section 2700 - Sanitary and Storm Sewer.

2710.3 - METHODS

2710.3.1 - General Provisions

Requirements for excavation, preparing trench, backfilling and restoration are contained in the Standard General Conditions and Specifications for Street and Utility Construction.

2710.3.2 - Blocking of HDPE Pipe

All plugs, caps, tees, bends and other thrust points shall be provided with concrete blocking if there is an unstrained joint within 36 feet of the thrust point. Blocking is not required when all joints within 36 feet are restrained.

When required, concrete blocking shall be installed per the Standard Details.

2710.3.3 - Locating Wire

Locating (tracer) wire shall be installed on all HDPE pressure sewers and services, consistent with the requirements as set forth in DIVISION 2700 - SANITARY AND STORM SEWER.

2710.3.4 - Connection and Assembly of Joints

Qualifications for Joining HDPE Sewer Pipe. Before being permitted to make joints on the HDPE water main pipe, the Contractor shall submit proof of competency for the employee(s) designated for such work.

Fusion Joining of HDPE Sewer Pipe. All HDPE main pipe and fittings shall be joined by butt fusion or electrofusion procedures.

2710.3.5 - Pressure Sewer Service Installation

Pressure sewer service facilities consisting of 1¼ service lines, complete with all required appurtenances, shall be installed as required by the Contract, in accordance with all pertinent requirements for main line installations together with the provisions hereof.

It shall be the responsibility of the Contractor to keep work exposed so the Engineer may obtain an accurate record of the location, depth and size of each service connection and other pertinent data such as the location of curb stops and pipe endings.

Pressure sewer service lines shall normally be installed by trenching or directional drilling and be subject to the same requirements as prescribed for the main pipeline installation, except for those which may not be pertinent or applicable. Where water service lines are installed alongside of pressure sewer services, installation shall be such as to maintain the minimum specified clearances between pipelines and provide proper and adequate bearing for all pipes and appurtenances.

Unless otherwise specified, installation of pressure sewer service lines shall be such as to provide for not less than seven feet of cover over the top of the pipe and for not less than 18 inches of clearance between pipelines. Also, at least three inches of clearance shall be maintained in crossing over or under other structures except that 12-inches shall be maintained when crossing water mains. Where the service pipe may be exposed to freezing due to insufficient cover or exposure from other underground structures, the pipe shall be insulated as directed by the Engineer.

HDPE pressure sewer service piping shall be installed in one piece without intermediate butt fusion or electrofusion joint couplings between the tapping tee with electrofusion saddle at the pressure sewer and the curb stop. Transition couplings shall be used to connect to the curb stop.

Connection of HDPE pressure sewer service lines to the pressure sewer shall be made with an approved tapping tee with electrofusion saddle on HDPE mains.

Unless otherwise indicated, service lines shall be installed on a straight line at right angles to the pressure sewer or property lines as directed by the Engineer. Service lines shall extend for such distance beyond the curb stop as may be specified in the Contract. In the absence of specific requirements, the service line shall be terminated at the curb stop, where it shall be connected to an existing line or, in the case of undeveloped property, capped or plugged, as approved by the Engineer.

The service pipe and curb stop coupling depth shall be such as to maintain not less than the specified minimum cover and provide for a standard service box installation where practicable. Curb stop shall be set on a concrete block. The service box shall be threaded over the curb stop coupling. Service boxes shall be installed plumb and be braced effectively to remain vertical during and after completion of backfilling. The service boxes shall be brought to existing surface grade when the final grade has not been established. When the final grade has been established, the Contractor shall extend the service box to finished grade.

2710.4 - TESTING

2710.4.1 - General

Pressure sewer and forcemains shall be subjected to the pressure and leakage tests prescribed herein and in conformance with the pipe manufacturer's recommendations. The Contractor shall furnish the pump, pipe connections, gauges, and measuring equipment, and shall perform the testing under the direct observation of the Engineer.

The Contractor may test each valved section, larger sections, or the entire pressure sewer or forcemain so long as the elevation differential between the highest and lowest point does not exceed 110 feet.

All air must be expelled from the pipe. A hydrostatic pressure of not less than 150 pounds per square inch, measured at the lowest point of elevation, shall be applied by means of a pump connected to the pipe in a satisfactory manner.

For ductile iron mains, pressure shall be maintained for a minimum duration of 2 hours. No drop in pressure will be allowed for acceptance of the main. Any defective joints, pipe, fittings, or valves revealed during the testing, or before final acceptance of the work, shall be satisfactorily corrected and the test shall be repeated until the specified requirement has been met.

For flanged pipe, no visible leakage shall be allowed during the test.

For HDPE mains, a monitored makeup water test will be used. This will consist of the initial expansion and test phases. During the expansion phase the main is pressurized to 150 psi and then enough clean water is added each hour for three hours to return to 150 psi. The test phase follows immediately. Using the values in the table below, the engineer will determine the amount of make up water allowed during a 2 hour test period. If less water is used than allowed, the test will pass. Air pressure will not be allowed for testing.

2 Hour HDPE Pressure Test Make Up Water Amount	
Nominal Pipe Size (inches)	Make-up Water Allowance for 2 hour test (gallons per 100 feet of pipe)
1 ¼	0.10
1 ½	0.10
2	0.11

The connection of pressure sewer services to HDPE pressure sewers with an electrofusion corp. saddle and corporation stop or a tapping tee with electrofusion saddle shall be soap tested and tested with air and accepted if it maintains 100 psig for 5 minutes. Accepted electrofusion corp. saddle or tapping tee with electrofusion saddle can then be tapped to the main and the tap or punch tee cap reinstalled. Pressure sewer pipes shall be pressure tested either jointly or separately from pressure sewer main testing. Test pressure shall be 150 psi.

2710.4.2 - Testing Tracer Wire Continuity

Tracer wire continuity shall be tested after installation of pipe.

2710.5 - MEASUREMENT AND PAYMENT

2710.5.1 – General

All items will be measured separately according to the Pay Item name and as detailed and defined in the Contract Drawings, Specifications, standard details or Special Provisions. Pipe will generally be designated by size (nominal diameter), strength class, kind or type, and laying conditions. Complete-in-Place items shall include all component parts thereof as described or required to complete the unit, but excluding any excesses covered by separate Pay Items.

2710.5.2 - Pressure Sewer, Pressure Sewer Service or Forcemain

Mainline pipe and service pipe of each kind and size will be measured separately per linear foot by the overall length along the axis of the pipeline, from beginning to end of each installation and without regard to intervening valves or specials. Terminal points of measure will be the spigot or cut end, base of hub or bell end, center of valves, intersecting centers of tee or

wye branch service connections, and center of main to center of curb stop. Linear measurement of piping will include the running length of any special fitting (tees, wyes, bends, gates, etc.) installed within the line of measure between specified terminal points. No additional measurement will be made for extra pipe installed due to extra depth required for direction drilling applications.

2710.5.3 – Valves

Valves of each size and type will be measured separately per each as complete units, including the required valve box setting.

2710.5.4 - HDPE Tapping Tee with Electrofusion Saddle

HDPE tapping tee and electrofusion corp. saddle of each size and type will be considered incidental to the service being installed.

2710.5.5 - HDPE Service Tees

Each tee will be considered incidental to the service being installed.

2710.5.6 - Tracer Boxes

Tracer Boxes of each type will be considered incidental to the service being installed.

2710.5.7 - Access Structures

Access structures, such as Manholes and Vaults, will be measured for payment in conformance with Section 2700 - Sanitary and Storm Sewer.

2710.5.8 – Cleanout Manhole Components

Cleanout manholes shall be installed at locations shown on the plans. The manhole structure, including precast concrete and casting, shall be paid for per the Standard General Conditions and Specifications for Street and Utility Construction.

All interior components of the cleanout manhole, including, but not limited to concrete support, HDPE pipe and bends, stainless steel support brackets, ball valve, camlock coupler, insulation, and chimney seal, shall be paid for in the lump sum price bid for “Cleanout Manhole Components.”

2710.5.9 - Pressure Sewer and Forcemain Fittings

All fittings for pressure sewer and forcemain installations shall be incidental to pipe installation and no measurement shall be made.

2710.6 - DETAILS

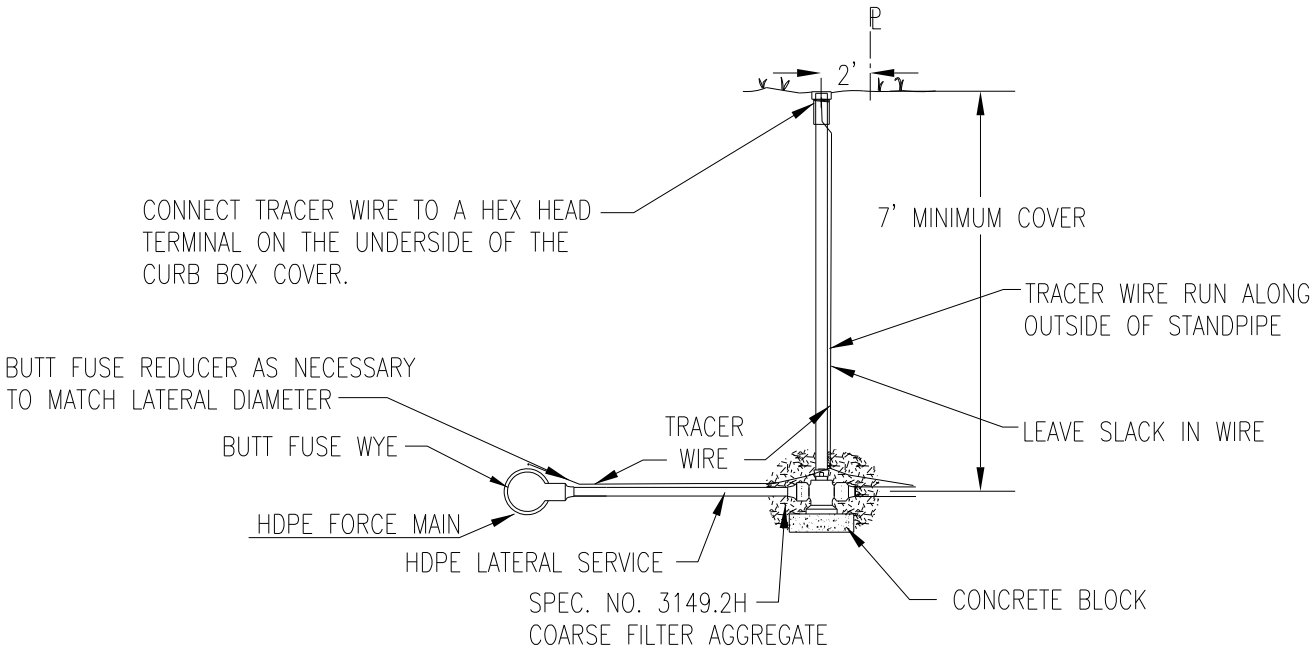

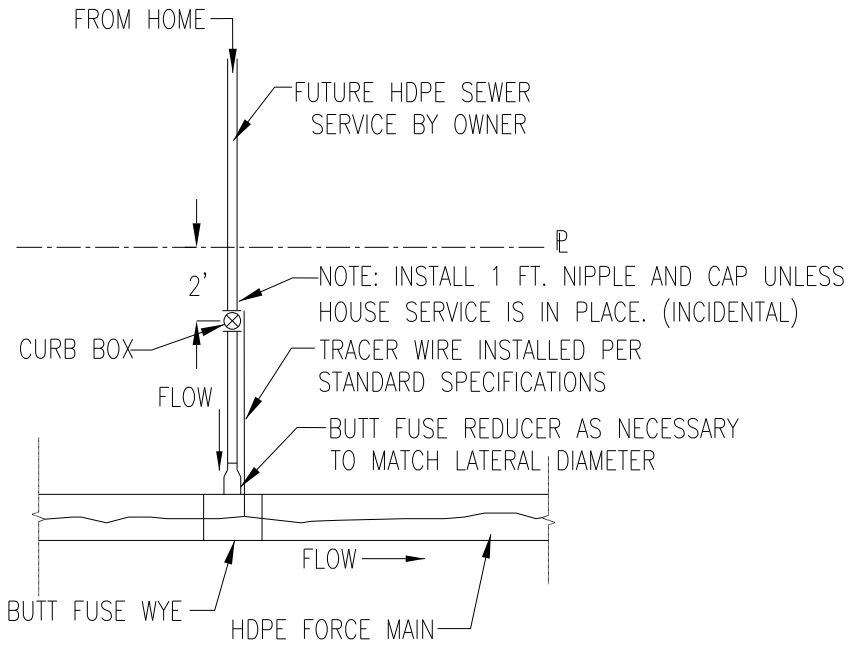

NOTES :

1. #12 GAUGE GREEN INSULATED COPPER TRACER WIRE SHALL BE INSTALLED WITH THE NON-CONDUCTIVE SERVICE PIPE. TRACER WIRE INSTALLATION REQUIRES ACCESS POINTS AT LEAST EVERY 300 FEET.
2. THE TRACER WIRE SHALL REMAIN CONTINUOUS TO THE GREATEST EXTENT POSSIBLE. SPLICES IN THE TRACER WIRE SHOULD BE MADE WITH SPLIT BOLT OR COMPRESSION TYPE CONNECTORS. WIRE NUTS SHALL NOT BE USED. A WATER-PROOF CONNECTION IS NECESSARY TO PREVENT CORROSION.
3. TRACER WIRE SHALL RUN FROM THE WYE AND TERMINATE IN A FLUSH MOUNTED TRACER BOX WITH A GREEN CAST IRON TOP.

HDPE PRESSURE LATERAL DETAIL

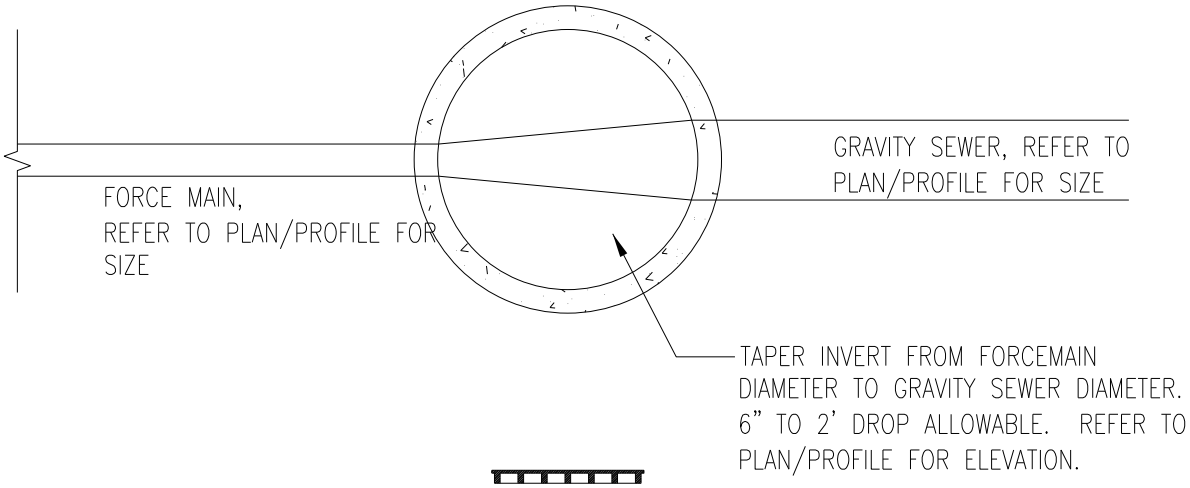

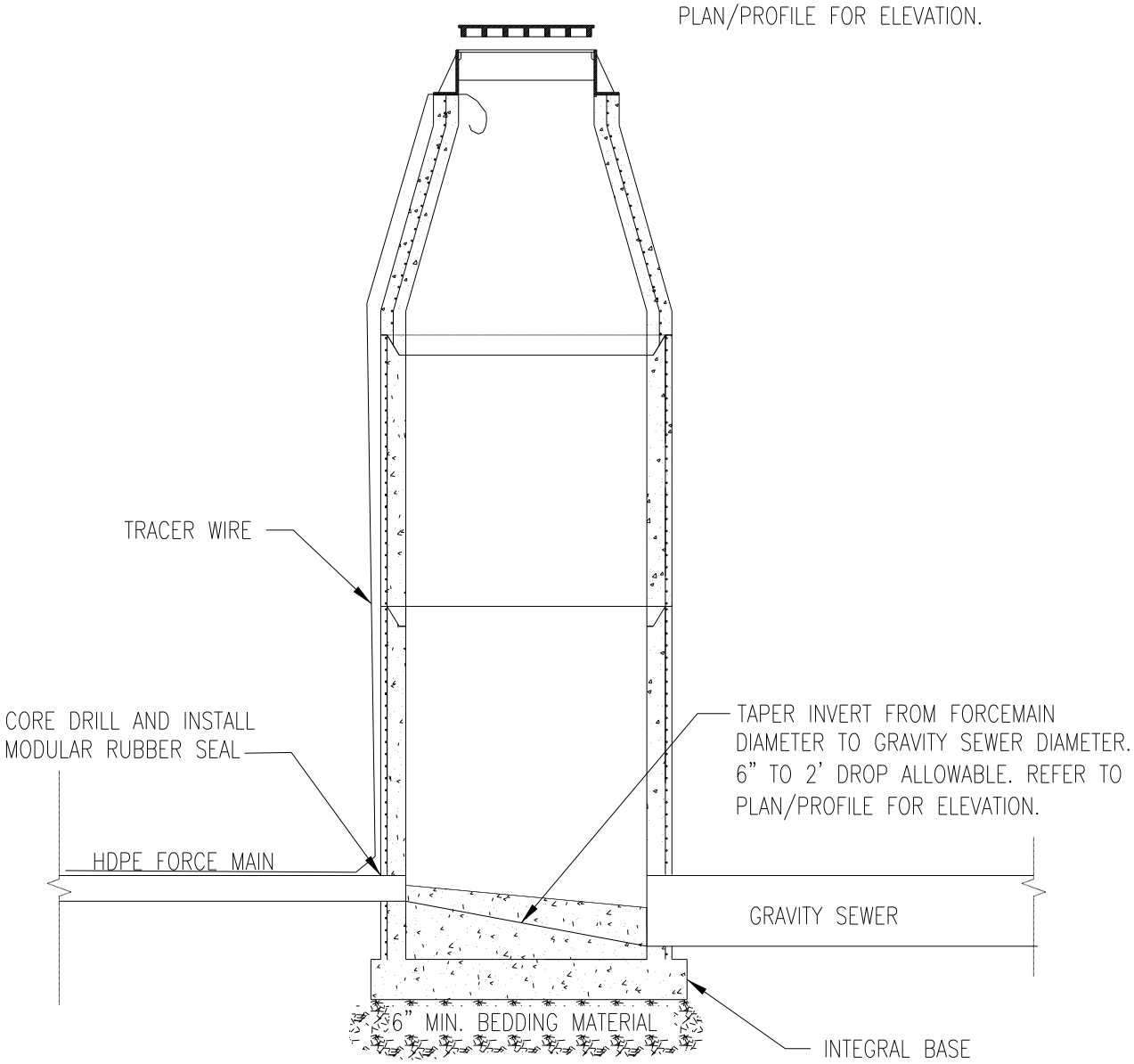

HDPE FORCEMAIN TO MANHOLE DETAIL

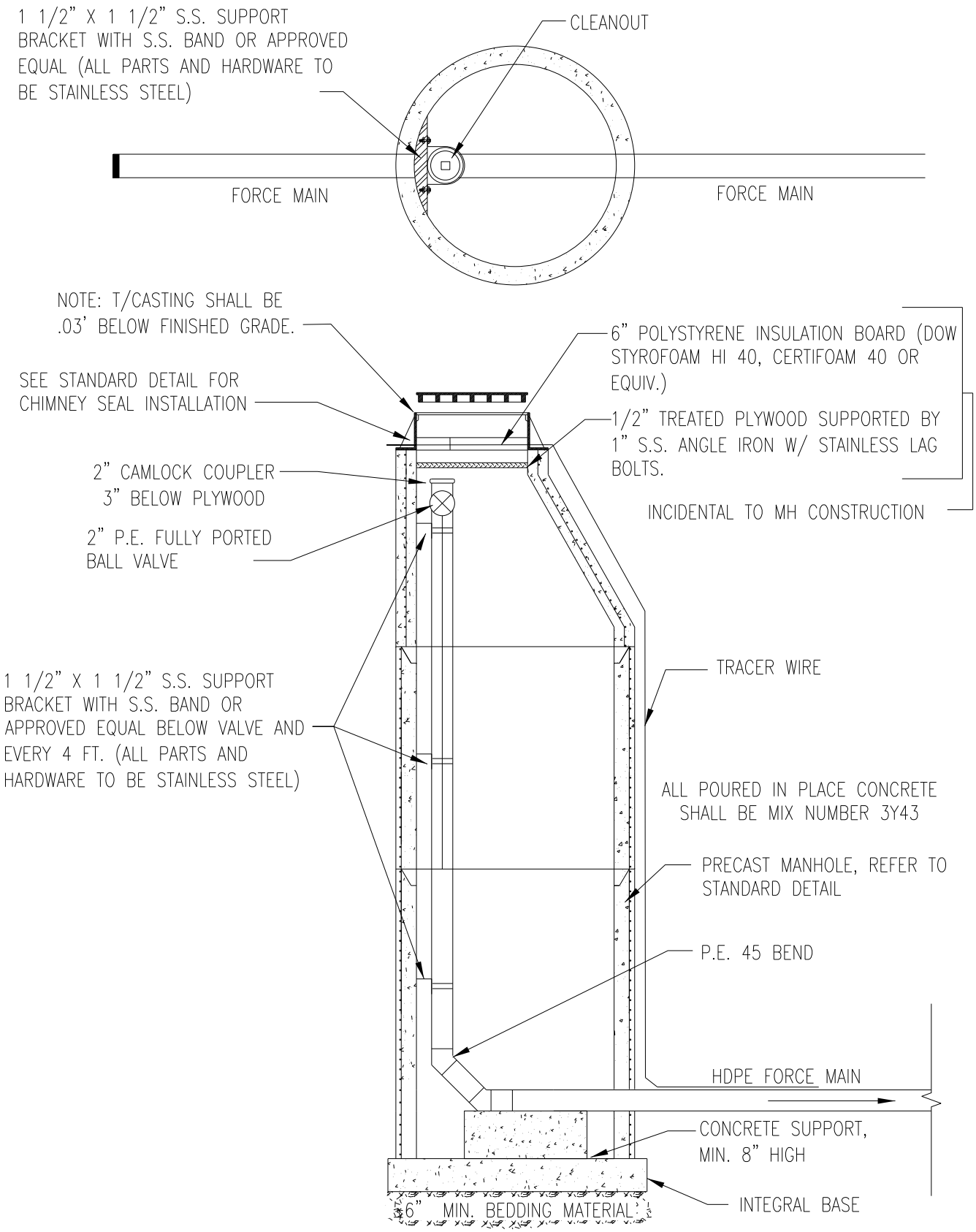

CLEANOUT MANHOLE DETAIL

THIS PAGE INTENTIONALLY LEFT BLANK

CITY OF ALTOONA

S P E C I F I C A T I O N S

DIVISION 2800 - LOCATING WIRE FOR WATER AND SANITARY SEWER

2800.1 - DESCRIPTION

2800.1.1 - General

Locating wire shall be installed on all HDPE water services, HDPE low pressure sanitary sewer and services, and gravity sanitary sewer mains and services.

Locating wire installation on mains shall run the full length of the pipe and terminate at the top of each corresponding manhole.

2800.1.2 –Sanitary Sewer

Locating wire shall be installed on all sanitary sewer and services. The wire shall be run along the full length of the main and terminate at the top of the manhole structure in a manner so as to not interfere with the manhole chimney seal. Locating wire for services shall be spliced into the main locating wire at the wye. The curb stop cover termination shall be at a hex head terminal integral to the cover.

2800.2 - MATERIALS

2800.2.1 - Locating (Tracer) Boxes

Locating Boxes for sewer applications shall be the Snake Pit Lite Duty Box Model LD14GTP for installations in turf, the Snake Pit Roadway Box Model RB14GTP in bituminous pavements, or the Snake Pit Concrete/Driveway Box Model CD14GTP in concrete pavement or sidewalk or an approved equal.

The tracer box shall have a green cast iron cover for sewer and direct connection hook-up for a locator transmitter.

The Contractor may also use Snake Pit Style boxes with an adjustable top as an acceptable equal. All other substitutions must be approved by the City prior to bidding.

A tracer box is not required for water service installations. The tracer wire shall be connected to a tracer wire terminal integral to the curb box cover, as specified in <u>DIVISION 2600 – WATER MAIN</u>.

2800.2.2 - Locating Wire for Open Cut installations

Locating (tracer) wire shall be #12 solid copper with "HMWPE" 30 mil insulation. Insulation for sanitary sewer applications shall be green. To minimize splices, wire shall be supplied on spools of not less than 500 feet.

2800.2.3 - Locating Wire for Directional Drilled Installations.

Locating wire shall be annealed 49-strand braided 302 alloy stainless steel. The conductors shall be insulated with 45 mil high-density polyethylene (HDPE) jacketing. Insulation for sanitary sewer applications shall be green. Insulation for water main installations shall be blue. The wire shall be tested in accordance with ASTM B-1 and D-1248 and spark tested at 7500 VAC. The breaking strength of the wire shall be at least 1150 pounds; wire that has less than this breaking strength shall be accepted. To minimize splices, wire shall be supplied on spools of not less than 500 feet.

2800.3 - METHODS

2800.3.1 - General

The locating wire for sewer and water shall be brought to the ground surface at locations shown on the Standard Details, Contract Drawings or the Special Provisions through a locating box or connected to a tracer wire set screw on the curb box cover. The wire shall be connected to the tracer box terminal.

Locating wire installed on new services on existing mains where no locating wire is currently present shall be connected to a minimum 1 pound magnesium anode installed at the main. Anodes shall also be installed at all dead ends on tracer wire.

The locating wire shall be laid directly over the utility. The Contractor shall be responsible for the installation of a locating wire with electrical continuity throughout the entire length.

2800.3.2 - Locating Wire Splices

Tracer wire shall remain continuous to the greatest extent possible. Splices in the copper tracer wire should be made with solder, split bolt type connectors or other type approved by the engineer. Splices in the stainless steel tracer wire should be made with split bolt type connectors or other type approved by the engineer. Wire nuts or clip type connectors shall not be used. All connections shall be protected to make them watertight. Waterproofing material shall be 3M 2200 or equal.

2800.3.3 - Locating Wire Connections

Tracer wire connections to corporation stops or curb stop covers shall be sprayed with a rubberized sealant to protect against corrosion.

Tracer wire connections from sewer mains into manholes shall be at the top of the manhole in a manner that will not interfere with the performance of the manhole chimney seal.

2800.4 – TESTING

2800.4.1 - General

All tracer wire must pass a locating test, in the presence of the Engineer, prior to acceptance of respective pipe installation. All equipment necessary to perform the test shall be provided by the Contractor.

2800.5 - MEASUREMENT AND PAYMENT

2800.5.1 - General

All locating wire installed shall be tested for continuity at the completion of the installation. No payment shall be made for pipe with a tracer wire that has not passed the continuity test.

Tracer wire and locator boxes shall be supplied by the Contractor. There shall be no measurement or payment for tracer wire or boxes. The cost of furnishing and placing locating wire and tracer boxes shall be considered incidental to the utility.

THIS PAGE INTENTIONALLY LEFT BLANK

CITY OF ALTOONA

S P E C I F I C A T I O N S

DIVISION 2900 - RESTORATION

2900.1 - DESCRIPTION

2900.1.1 - General

Work in this section shall consist of final restoration of the disturbed construction areas using landscape plantings and decorative items as shown on the Plans and Details.

All work in this division shall conform to the requirements of comparable sections of the WSSHSC including Sections 606, 615, 616, 625 through 632, inclusive, except as modified within this specification.

2900.2 - MATERIALS

2900.2.1 - General

All materials furnished for this project shall be approved by the Engineer prior to being used.

2900.2.2 - Topsoil

2900.2.2.1 - General

Topsoil used for the finished grading of all lawn or planted areas shall be a fertile, friable loam, neither excessively acid, nor excessively alkaline, suitable for the growth of grass or plants and of the **best quality obtainable** in the locality. In urban or other areas where a lawn type turf is desired, 100 percent of the topsoil shall pass the No. 10 sieve. Topsoil shall be from local sources whenever possible and not from bogs or marshes.

2900.2.2.2 - Testing

All topsoil shall be tested at a certified soil test laboratory by the Contractor, and a copy of the test report submitted to the Engineer. Tests shall consist of mechanical grain size analysis, organic content, PH, and nutrient amounts.

2900.2.2.3 - Supplementing Topsoil

Topsoil containing less than 3% organic matter shall be supplemented with humus to achieve 3% organic matter content.

2900.2.2.4 - Salvaged Topsoil

Salvaged topsoil shall be used when specified in the Contract Bid Documents or as directed by the Engineer.

2900.2.3 - Humus

Humus shall be finely divided, granular texture peat moss or peat muck with pH of 6.0 to 7.5.

2900.2.4 - Fertilizer

Fertilizer shall be solid or liquid form commercial fertilizer having an analysis of 20-10-10 (Nitrogen/Phosphoric/Potash) or as recommended in the soil test. Organic fertilizer may be used only with special permission of the Engineer.

2900.2.5 - Mulch

Mulch shall be shredded hardwood bark mulch for mulching under trees and shrubs, and straw, burlap or fiber blanket for seeded areas. Other mulch may be substituted if prior approval is given by the Engineer.

2900.2.6 - Fiber Blanket

The material intended for use for erosion mat shall be a uniform web of interlocking wood excelsior fibers, with a net backing on one or both sides as specified. The wood from which the blanket is produced shall have been properly cured to achieve adequately curled and barbed fibers. The blanket shall be of uniform thickness with the wood fibers evenly distributed over the entire area of the blanket. The blanket shall be furnished in rolled strips. The width of the strips shall be 48 inches, plus or minus one inch. The weight of the blanket measured under average atmospheric conditions shall be 78 pounds per 80 square yard, plus or minus ten percent. The net backing shall have a mesh size not exceeding 1-1/2 x 3 inches and may be woven from twisted paper, cotton cord, a biodegradable plastic or other approved material. The blanket shall be non-toxic to vegetation.

2900.2.7 - Sod

Sod shall be a dense, well rooted growth of permanent and desirable grasses, indigenous to general locality and practically free from weeds or undesirable grasses. All sod shall be highland sod with peat sod not being allowed. Existing sod will not be acceptable for reuse. At the time the sod is cut, the grass on the sod shall have a length of approximately 2 inches and the sod shall have been raked free from debris.

The thickness of the sod shall be as uniform as possible, approximately 1-1/2 inches or more, depending on the nature of the sod, so that practically all of the dense root system of the grasses will be retained, but exposed, in the sod strip and so that the sod can be handled without any undue tearing or breaking.

2900.2.8 - Seed

This section shall be modified to state that the only acceptable seed mixture shall be as follows:

35% Kentucky Bluegrass
30% Creeping Red Fescue
20% Kentucky Park Bluegrass
10% Perennial Rye - Fiesta 2
5% Other Grasses

Application rate shall be a minimum of 5 lbs. per 1000 square feet. The Contractor shall rake, and prepare seed bed prior to applying fertilizer, seed and mulch, and the prepared area shall be approved by Engineer prior to commencing.

2900.2.9 - Trees and Shrubs

All plants shall be nursery grown stock that has been transplanted or root-trimmed two or more times according to the kind and size of plant. All plants shall be typical of their species and have well formed tops and root systems and shall be free from injurious insects, plant diseases or other plant pests. Plants shall be hardy under the climatic conditions at the site.

Plants furnished shall be free from the following defects:

(1) Serious injuries to top, branches, trunk, bark or roots.
(2) Dried out roots.
(3) Prematurely opened buds.
(4) Thin or poor tops or root systems.
(5) Evidence of molding.

(6) Dry, loose or broken ball of earth in B & B stock.

Plant stock shall conform to the code of standards set forth in the current edition of American Standard for Nursery Stock recommended for general use and adoption by the American Association of Nurserymen, Inc.

2900.2.10 - Stakes

The Contractor shall supply 6-inch long, pointed, wood lath or shingles as approved by the Engineer.

2900.2.11 - Water

Water supplied by the Contractor shall be from a potable source, free from any impurities or substances which are harmful to plants or sod.

2900.2.12 - Concrete Paving Stone

2900.2.12.1 - General

Concrete paving stone shall be constructed as indicated on the plans or as directed by the Engineer. The concrete paving stone shall be a rectangular stone with a Holland style and be conforming to applicable sections of ASTM C55 (latest edition). The Contractor shall verify the exact colors available prior to providing this item to the Engineer so an exact color can be selected.

2900.2.12.2 - Dimensions and Strength

Concrete paving stone shall be rectangular, have chamfered edges at the top to reduce chipping and with the following Holland-style nominal dimensions:

Width: 4-inches
Length: 8-inches
Thickness: 2 1/2 -inches

Product dimensions, accounting for allowable variation, shall maintain the width of the unit at one-half the length of the unit, plus or minus 1/32 inch total variation between one-half the length and the length of the paver and the full width.

The minimum compressive strength shall be 4,000 psi at 28 days or at time of incorporation in the work if less than 28 days. The maximum water absorption shall not to exceed 6 percent by weight.

2900.2.12.3 - Bedding

2900.2.12.3.1 - Bituminous Setting Bed (Concrete Paving Stone)

The bituminous setting bed shall conform to the State of Minnesota, Department of Transportation, Standard Specifications for Construction - Section 2361, Asphaltic Concrete Surface (Fine Mix). The tack coat shall be in accordance with Section 402 of the WSSHSC.

2900.2.12.3.2 - Sand-Cement Bed (Granite Paver)

The sand-cement bed shall consist of three (3) parts sand and one (1) part Portland Cement by volume, mixed until it is a uniform color.

2900.2.12.4 - Neoprene-Modified Asphalt Adhesive

2900.2.12.4.1 - Mastic

The mastic or asphaltic adhesive shall meet the following requirements:

Solids (base) ..... 75 + 1%
Lbs./Gal. ..... 8 - 8.5 lbs.
Solvent .....Varsol (over 100°F. flash)

2900.2.12.4.2 - Base

The base material shall contain 2% neoprene, 10% fibers and 88% asphalt and shall meet the following requirements:

Melting Point - ASTM D-36 ..... 200°F. Minimum
Penetration - 77°F. 100 Gram Load
5 second (.1 m.m.) ..... 23 - 27
Ductility - ASTM D-133-44 @ 25°C.
5 cms/per minute ..... 125 cm. Minimum

2900.2.12.5 - Paver Filler Material

2900.2.12.5.1 - Joint Filler

Joint filler shall be a Portland cement and sand mixture as approved by the Engineer. The joint filler shall be premixed to the Owner-selected color and conform to ASTM C-150. The clean natural sand shall be free of organic material and 100 percent shall pass the No. 8 sieve

with a maximum of 10 percent passing the 200 sieve. The joint filler shall be mixed as one part Portland Cement and three parts sand.

2900.2.12.5.2 - Expansion Joint Filler

The preformed joint filler shall meet the specifications of Section 502.2.4 of the Preformed Joint Filler of the WSSHSC.

2900.2.12.6 - Expansion Joint Sealants

2900.2.12.6.1 - Horizontal Joints

Sealant shall be two-part, self-leveling, non-tooling, polyurethane with a Shore A hardness of not less than 38. The sealant shall be tack-free four hours after application with non-asbestos filler to prevent running or sagging on a 5° slope. The color of the sealant shall be approved by the Engineer. All joint surfaces shall be primed prior to sealing. Approved manufacturers of the sealants are Sonolastic Paving Joint Sealant, as manufactured by Sonneborn; Sika 411SL, as manufactured by Sika Corporation; Pecora Corporation NR200; or approved equal.

2900.2.12.6.2 - Vertical Joints

The vertical joints shall be sealed with Sonolastic NP1, one part, non-prime, non-sag, urethane sealant, as manufactured by Sonneborn; Sikaflex-1a, one part, non-prime, non-sag urethane sealant, as manufactured by Sika Corporation; Pecora Corporation, Dynatrol II; or approved equal.

2900.2.12.7 - Concrete Paving Stone Cleaner

A concrete paving stone detergent shall be final clean-up material. Detergent shall be a blend of surface acting acids, chelating, and wetting systems. Its form shall be water-clear liquid with specific gravity of 1.13, and a pH (1:6 dilution) of 0.5; or approved equal. Approved concrete paving stone cleaners are Sure Klean "Protec Tile", manufactured by Pro-So-Co, Inc.; Super Grout Release, by Klein Co., Inc.; Dry-Seal, by Concrete Service Materials Co.; or approved equal.

2900.2.13 - Concrete Split-Block Retaining Wall

Concrete split-block used for retaining walls shall be commercially manufactured with the exposed surface fractured.

2900.2.14 - Solid Core Interlocking Block Retaining Wall

The exposed face of the precast blocks shall have split-face texture to look similar to natural split rock. The design of the precast units shall be submitted to the Engineer for review and approval at least four (4) weeks prior to the wall construction. These precast units shall be manufactured by an approved manufacturer. Color of the precast blocks shall be an earthtone color unless otherwise indicated on the plans or directed by the Engineer. Versa-Lok, Rockwood Classic with Straight Face, or approved equal are acceptable block retaining wall systems.

2900.2.15 - Rip Rap

Materials used for rip rap shall conform to the requirements of the WSSHSC, Section 606, for the classification of material as stated on the Plans, Details, and included on the Proposal. When filter fabric is specified for rip rap it shall be Mirafi 700X or approved equal.

2900.2.16 - Mailboxes

All mailboxes which interfere with the work shall be removed by the Contractor using reasonable care. They shall be given to their owner for resetting. Any damage to mailboxes due to Contractor's unreasonable care shall be the responsibility of the Contractor to replace at his or her own expense.

2900.3 - METHODS

2900.3.1 - General

The Contractor shall landscape and restore all disturbed areas to the type and extent as shown on the plans or as directed by the Engineer.

Areas disturbed by the construction outside the project limits, as determined by the Engineer, shall be restored by the Contractor at his expense. The Engineer shall determine and order the type and extent of the restoration.

2900.3.2 - Subgrade Preparation

The Contractor shall remove all existing sod, roots and debris, and grade the area for the placement of topsoil.

2900.3.3 - Topsoil

2900.3.3.1 - General

After completion of the subgrading, the Contractor shall place approved topsoil over the area at the depth specified. The topsoil shall be spread uniformly and tamped or compacted, and graded for the placement of sod or seed.

2900.3.3.2 - Placement of Topsoil

The Contractor shall use care when placing topsoil to prevent damage or marking of the sidewalk, curb and gutter, or driveways. If, in the Engineer's opinion, the method of placement of topsoil is unacceptable, the Contractor shall implement an alternate and acceptable method of placement.

2900.3.3.3 - Preparation of Topsoil

The Contractor shall hand rake all areas of topsoil in preparation for the placement of seed or sod. The area shall be raked uniform and approved by the Engineer prior to the placement of seed or sod. All topsoiled areas shall be seeded or sodded within 24 hours of hand raked preparation. In areas to be seeded, the top 2 inches of the topsoil shall be loose in preparation for the seed to further enhance the germination of the seed. Should the topsoil form a crust on it prior to the placement of the seed, the Contractor shall prepare the topsoil by reraking.

2900.3.4 - Fertilizer

Prior to the placement of sod or seed, the areas of topsoil shall be fertilized at the application rate of 10 pounds per 1000 square feet. Fertilizer shall be incorporated to a depth of 2 inches.

2900.3.5 - Sod

After completion of the fertilization, and after approval of the Engineer, the Contractor shall place the Highland sod. The sod shall be laid so that each strip abuts snugly against the other with no gaps. Joints caused by the abutting ends shall be staggered. All sod shall be rolled sufficiently to set and level the sod. The finished ground elevation of the sod shall be even with the existing surfaces (i.e. sidewalks, curbs, etc.), with the grass projecting approximately one inch above.

2900.3.6 Staking

If the sod is placed on sloped areas, ditches, flumes or other appurtenances where a concentrated flow of water may be expected, the sod shall be held in place with stakes. The stakes shall be placed, as directed by the Engineer, sufficiently to deter the sod from rolling or washing out. The stakes shall be removed by the Contractor after substantial growth and mending has occurred. The staking of the sod shall be considered incidental to the item of sodding.

2900.3.7 - Seed

After completion of the fertilization, the Contractor shall spread the seed. The area to be seeded shall be worked with the appropriate equipment to obtain the proper seed bed. The seed mixture shall be uniformly applied at the minimum rate of 5 pounds per 1000 square feet. The seed shall be sufficiently sown into the soil and uniformly covered with mulch. All seeding shall be completed by hand. Hydroseeding will not be allowed unless approved by the Engineer.

2900.3.8 - Fiber Blanket and Mulch

The Contractor shall place a fiber blanket or mulch as shown on the Plans and Details or as directed by the Engineer. The fiber blanket or mulch shall be placed on the specified area immediately following the seeding operation. The Contractor shall satisfactorily maintain the area until final acceptance of the work.

2900.3.9 - Lawn Restoration

2900.3.9.1 - General

The Contractor shall replace the disturbed lawn areas using one of the following methods as directed by the Engineer.

2900.3.9.2 - Type "A" Lawn Replacement

The Contractor shall remove and dispose of existing soil and replace with 5 inches of new topsoil, prepare the topsoil, fertilize, sod and maintain.

2900.3.9.3 - Type "B" Lawn Replacement

The Contractor shall salvage and stockpile the existing topsoil and replace to a depth of 5 inches, prepare the salvaged topsoil, fertilize, sod and maintain.

2900.3.9.4 - Type "C" Lawn Replacement

The Contractor shall remove and dispose of existing soil, and replace with 6 inches of new topsoil, prepare the topsoil, fertilize, seed, mulch, and maintain.

2900.3.9.5 - Type "D" Lawn Replacement

The Contractor shall salvage and stockpile the existing topsoil, and replace it to a depth of 6 inches, prepare the topsoil, fertilize, seed, mulch, and maintain.

2900.3.9.6 - Type "E" Lawn Replacement

The Contractor shall scarify the disturbed area, fertilize, seed (50% Alta Fescue, 30% Kentucky Blue Grass, 20% perennial rye grass), mulch, and maintain.

2900.3.9.7 - Type "F" Lawn Replacement (Special Wetland Seeding)

The Contractor shall salvage and stockpile the existing topsoil, and replace it to a depth of 6-inches, prepare the topsoil, fertilize, seed with Wisconsin D.O.T. #60 seed mixture, straw mulch and maintain.

2900.3.9.8 - Type "H" Lawn Replacement (Seeding and Erosion Mat)

The Contractor shall place 6-inches of new topsoil, prepare the topsoil, fertilize, seed with Wisconsin D.O.T. # 70 seed mixture, fiber blanket and maintain.

2900.3.9.9 - Maintenance

The Contractor shall be responsible to adequately water, maintain, and protect the sod and seeded areas for a minimum of 30 days or until sustained growth has been obtained. The Contractor shall repair or replace at his own expense all areas which do not sustain growth and areas damaged by weather or trespassing, as directed by the Engineer.

All restoration work, including sod and seed which is placed after October 1 of any year, shall be inspected for growth and acceptance the following spring.

2900.3.10 - Trees and Shrubs

2900.3.10.1 - General

The Contractor shall place plantings as shown on the plans or as directed by the Engineer.

2900.3.10.2 - Planting Times

The normal spring planting season for all plants shall extend to June 1. The normal fall planting season for all plants except evergreens shall begin on October 1. Fall evergreen planting shall be done between September 1 and October 1. Unless otherwise approved, planting shall not be done when the ground is frozen or when the soil is in an unsatisfactory condition for planting.

2900.3.10.3 - Planting Guarantee

The Contractor shall guarantee all new plant materials through one spring growing season after acceptance. Plants accepted after October 1 shall be guaranteed until October 1 of the following year. If any plants die, they shall be replaced by the Contractor at no additional expense to the Owner.

2900.3.10.4 - Planting

The plant hole shall be large enough to permit placing at least 6 inches of backfill material around and a minimum of 2 inches beneath the balls of B & B stock. The plant hole shall be backfilled with topsoil to which compost has been added at the ratio of six parts soil to one part compost by volume. The soil compost mixture shall be placed in layers around the ball. Each layer shall be carefully tamped in place in a manner to avoid injury to the ball or disturbing the position of the plant. When approximately two-thirds of the plant hole has been backfilled, the hole shall be filled with water and the soil allowed to settle around the ball. Plants shall have the burlap cut away or folded back from the top of the ball before applying the water. After the water has been absorbed, the plant hole shall be filled with topsoil and tamped lightly to grade. Any settlement shall be brought to grade with topsoil. Unless otherwise directed or specified, a shallow rain cup or rain basin shall be formed in the completed backfill by shaping the soil around the plant.

2900.3.10.5 - Preparing Plantings

The bruised or broken parts or large or fleshy roots shall be cut off smoothly before planting or potting. The tops of deciduous plants shall be pruned either before or at the time of planting.

2900.3.10.6 - Mulching Plantings

Mulch shall be placed, after any necessary backfilling, adjustment and watering has been performed, over the backfilled plant hole or plant bed within the specified area to a depth of approximately three inches, unless otherwise specified.

2900.3.10.7 - Bracing and Guying of Trees

Trees shall be braced and guyed. The bracing and guying materials shall consist of wood or steel stakes, wire, rubber hose, soft rope or straps, turnbuckles, and other material as needed to perform the work. Stakes shall be of solid durable wood approximately 2" x 2" and of the required length, except that stakes used for bracing may be approved steel posts of the required length.

Each wire where it encircles the tree shall be enclosed in a hose of sufficient length to clear the trunk 6" at the ends. The wires shall be drawn taut to equal tension, by means of twisting or use of turnbuckles, and securely fastened, with the trunk of the tree remaining in a vertical position.

2900.3.10.8 - Plant Maintenance

The Contractor shall properly care for all plants from the time of planting until the partial or final acceptance of the work under the contract. Proper care of plants shall consist of doing such watering, weeding, cultivating, pruning, spraying, tightening of braces and guys, remulching and such other work as may be necessary to keep the plants in a healthy growing condition.

All mulched area shall be kept free of weeds by hoeing and hand weeding. Pesticides shall be applied as required to control insects and disease and to keep the plants in a healthy condition.

2900.3.11 - Rip Rap

The Contractor shall place rip rap as shown on the Plans and Details and conforming to the WSSHSC, Section 606, except as modified within this specification.

Rip rap shall be placed on an approved filter fabric. The fabric shall be covered and held in place using 4 inches of pea gravel. Filter fabric and pea gravel shall be considered incidental to the cost of rip rap.

2900.3.12 - Concrete Split-Block Retaining Wall

The Contractor shall install the concrete split-block retaining wall as shown on the Plans and Details.

The wall shall be constructed with courses of split concrete block laid up without mortar on a poured concrete footing. Configuration and line and grade shall be as shown on the details. The blocks shall be placed such that the grade follows the sidewalk grade and shall be stepped as determined by the Engineer. The top three courses shall be secured together with mortar.

2900.3.13 - Solid Core Interlocking Block Retaining Wall

The work under this item shall consist of furnishing and installing precast solid core interlocking blocks and incidentals necessary to maintain structural integrity and drainage in accordance with details shown in the plans, approved manufacturer's specifications, and as hereinafter provided for a retaining wall structure. The precast block retaining wall shall be constructed at the locations and dimensions as shown on the plan and as directed by the Engineer. Butyl adhesive shall be used to secure the top cap of the wall to prevent displacement or removal.

2900.3.14 - Concrete Paving Stone (Unpaved)

2900.3.14.1 - General

The Contractor shall furnish and install Concrete Paving Stone where shown on the plans or directed by the Engineer. Paving stones shall be laid according to design as shown in the Plans and Details. They shall be cut where required to fit flush to concrete borders (sidewalks, curbs, planters, light bases, etc.).

2900.3.14.2 - Mock-up

Lay a sample of concrete paving stones the full width of sidewalk by approximately 10 feet long. Show typical coursing, bond, joint, treatment, corner construction, etc. Do no additional work until sample is approved. Approved sample shall represent minimum acceptable standards of workmanship. Any work of lesser quality is subject to rejection and replacement. The approved mock-up shall be used for the project.

2900.3.14.3 - Product Handling

Materials shall be protected against damage and discoloration. The use of damaged or discolored materials is prohibited. Remove the rejected materials from the project immediately after detection. Chipped masonry units exceeding limits outlined below will also be rejected.

2900.3.14.4 - Submittals

2900.3.14.4.1 - Certificate of Compliance

The concrete paving stone manufacturer shall submit a certificate, after award of contract and prior to start of construction operations, stating compliance with compressive strength, absorption, abrasion index, freeze-thaw, dimensional tolerance, skid resistance, and modulus of rupture of brick paver.

2900.3.14.4.2 - Samples

Prior to furnishing the concrete paving stones, manufacturers shall submit a product sample of the following to the Engineer for color and texture approval:

Five (5) - 4-inch x 8-inch x 2-1/2-inch concrete paving stones.

2900.3.14.5 - Installation

Paving stones shall be laid over filter fabric, 4-inches of crushed aggregate base course and 1-inch of clean masonry sand base unless otherwise shown on the Plans and Details. Stones shall slope evenly and be flush with the surrounding masonry. The pattern shall be herringbone as shown in the plans. The face of the brick, shall be level with the finished street or sidewalk surface. Hand tight joints shall be approximately 1/8 inch. However, the following tolerances are acceptable:

(a) Maximum joint spacing for up to 10 consecutive, parallel joints shall not exceed 1/4 inch width per joint. Joints exceeding 1/4 inch width shall require corrective realignment.

(b) Vertical displacement of any one or more bricks shall not exceed 1/8 inch either above or below an adjacent surface. Variations exceeding 1/8 inch above or below shall require corrective realignment.

If finished paved surface has a differential height exceeding tolerances described above, remove paver(s), fill, compact, and level setting bed, apply adhesive and reinstall paver(s) as specified. Allowable tolerance for overall surface shall be 1/4 inch per 10 feet from finished grade. Allowable tolerance between concrete and pavers is 1/4 inch in surface height.

2900.3.14.6 - Leveling of Finished Surface

To obtain smooth, even surface, cover concrete paving stones with 1/2-inch plywood or other similar sheathing, and roll with roller to level concrete paving surface to comply with specified tolerance.

2900.3.14.7 - Cutting

Make necessary brick paver cuts with a power saw, protect clean-cut edges. Units with chipped surfaces or irregular cuts will not be accepted.

2900.3.14.8 - Filling Joints

Joints shall be filled with masonry sand and the excess material shall be removed with a broom. Fog entire area of sand-filled joints with light mist spray. Repeat filling of the joints and spraying with water until joints are completely filled. See Section 2900.3.15.13 Cleaning & Repairing for all final cleaning.

2900.3.14.9 - Expansion Joint

Expansion joints shall be located wherever new construction meets existing; wherever brick meets concrete; wherever concrete meets footings, tree wells, curb and gutter; and wherever subsurface conditions change, i.e. vault/no vault.

Joint sealant shall be installed over expansion joints level with surrounding materials, and in strict accordance with manufacturer's printed instructions. Allow no gaps or voids. Remove over-flows and protect materials from being tracked onto adjacent finished surfaces until cured.

2900.3.14.10 - Cleaning and Repairing

Clean concrete paving stone surface with cleaning detergent within 48 hours of joint filling. Dilute in accordance with manufacturer's instructions. Spray or brush onto surface, allow to set 3-5 minutes. Scour with stiff bristle brushing action, and completely rinse surface of cement residue.

Repair, and touch-up or replace concrete paving stone where directed by the Engineer The repairing shall include other work which has been soiled, discolored or damaged by the placement of the concrete paving stone.

2900.3.14.11 – Sealing

After the concrete paving stones have been installed and all cleanup and repair has been completed, the Contractor shall apply two (2) coats of clear concrete sealer to the surface of the concrete paving stone. The application of the concrete sealant shall be considered incidental to the item of concrete paving stone.

2900.3.14.12 - Maintenance

The Contractor shall examine paving stones one year after placement, and shall relevel and tamp as required to provide a smooth and regular surface.

2900.3.15 - Concrete Paving Stone (Paved Areas)

2900.3.15.1 - Mock-up

Lay a sample of concrete paving stones the full width of sidewalk by approximately 10 feet long. Show typical coursing, bond, joint, treatment, corner construction, etc. Do no additional work until sample is approved. Approved sample shall represent minimum acceptable standards of workmanship. Any work of lesser quality is subject to rejection and replacement. The approved mock-up shall be used for the project.

2900.3.15.2 - Product Handling

Materials shall be protected against damage and discoloration. The use of damaged or discolored materials is prohibited. Remove the rejected materials from the project immediately after detection. Chipped masonry units exceeding limits outlined below will also be rejected.

2900.3.15.3 - Weather Protection

2900.3.15.3.1 - Freezing Weather

Do no masonry work unless means, approved by the Engineer, are provided for heating materials.

2900.3.15.3.2 - Rainy Weather

Work can proceed over damp bituminous base; but no work will be allowed over ponded or standing water.

2900.3.15.4 - Submittals

2900.3.15.4.1 - Certificate of Compliance

The concrete paving stone manufacturer shall submit a certificate, after award of contract and prior to start of construction operations, stating compliance with compressive strength, absorption, abrasion index, freeze-thaw, dimensional tolerance, skid resistance, and modulus of rupture of brick paver.

2900.3.15.4.2 - Samples

Prior to furnishing the concrete paving stones, manufacturers shall submit a product sample of the following to the Engineer for color and texture approval:

Five (5) - 4-inch x 8-inch x 2-1/2-inch concrete paving stones.

2900.3.15.5 - Placement of Bituminous Setting Bed

To install the setting bed over the surface of the base, place 3/4-inch deep control bars directly over the base. If grades must be adjusted, set wood chocks under depth control bars to proper grade. Set two bars parallel to each other approximately 11 feet apart to serve as guides for striking board (12 ft. long x 2 in. x 6 in. board). The depth control bars shall be set carefully to bring the pavers, when laid, to finished grade.

Place some bituminous bedding between the parallel depth control bars. Pull this bed with the striking board over these bars several times. After each passage, low porous spots shall be showered with fresh bituminous material to produce smooth, firm, and even setting bed. As soon as this initial panel is completed, advance the first bar to the next position in readiness for striking the next panel. Carefully fill up any depressions that remain after removing the depth control bars and wood chocks.

The setting bed shall be rolled with a power roller to a nominal depth of 3/4-inch while still hot. The thickness shall be adjusted so that when the bricks are placed, the top surface of the pavers will be at the required finished grade.

2900.3.15.6 - Placing Adhesive

A coating of 2% neoprene-modified asphalt adhesive shall be applied by mopping or squeegeeing or troweling over the top surface of the bituminous setting bed so as to provide a bond under the pavers. If it is troweled, the trowel shall be serrated with serrations not to exceed 1/16 of an inch in height. Install in accordance with manufacturer's directions.

2900.3.15.7 - Laying Concrete Paving Stones

After the asphalt adhesive is applied, carefully install concrete paving stones in straight courses with hand tight joints and uniform top surface. The pattern shall be herringbone as shown in the plans. The face of the brick, shall be level with the finished street or sidewalk surface. Hand tight joints shall be approximately 1/8 inch. However, the following tolerances are acceptable:

(a) Maximum joint spacing for up to 10 consecutive, parallel joints shall not exceed 1/4 inch width per joint. Joints exceeding 1/4 inch width shall require corrective realignment.

(b) Vertical displacement of any one or more bricks shall not exceed 1/8 inch either above or below an adjacent surface. Variations exceeding 1/8 inch above or below shall require corrective realignment.

If finished paved surface has a differential height exceeding tolerances described above, remove paver(s), fill, compact, and level setting bed, apply adhesive and reinstall paver(s) as specified. Allowable tolerance for overall surface shall be 1/4 inch per 10 feet from finished grade. Allowable tolerance between concrete and pavers is 1/4 inch in surface height.

2900.3.15.8 - Leveling of Finished Surface

To obtain smooth, even surface, cover concrete paving stones with 1/2-inch plywood or other similar sheathing, and roll with roller to level concrete paving surface to comply with specified tolerance.

2900.3.15.9 - Cutting

Make necessary brick paver cuts with a power saw, protect clean-cut edges. Units with chipped surfaces or irregular cuts will not be accepted.

2900.3.15.10 - Paver Joint Protection

Apply protective emulsion in strict accordance with manufacturer's printed instructions. Avoid excessive application of material to avoid brick joints being coated. Allow approximately 20 minutes for drying time.

2900.3.15.11 - Filling Joints

Sweep dry sand and colored cement into joints until completely filled. Remove excess material and broom-sweep surface. Fog entire area of sand-filled joints with light mist spray. Allow cement in joint to take initial set before heavy rinse. See Section 2900.3.15.13 Cleaning & Repairing for all final cleaning.

2900.3.15.12 - Expansion Joint

Expansion joints shall be located wherever new construction meets existing; wherever brick meets concrete; wherever concrete meets footings, tree wells, curb and gutter; and wherever subsurface conditions change, i.e. vault/no vault.

Joint sealant shall be installed over expansion joints level with surrounding materials, and in strict accordance with manufacturer's printed instructions. Allow no gaps or voids. Remove over-flows and protect materials from being tracked onto adjacent finished surfaces until cured.

2900.3.15.13 - Cleaning and Repairing

Clean concrete paving stone surface with cleaning detergent within 48 hours of joint filling. Dilute in accordance with manufacturer's instructions. Spray or brush onto surface, allow to set 3-5 minutes. Scour with stiff bristle brushing action, and completely rinse surface of cement residue.

Repair, and touch-up or replace concrete paving stone where directed by the Engineer The repairing shall include other work which has been soiled, discolored or damaged by the placement of the concrete paving stone.

2900.3.15.14 – Sealing

After the concrete paving stones have been installed and all cleanup and repair has been completed, the Contractor shall apply two (2) coats of clear concrete sealer to the surface of the concrete paving stone. The application of the concrete sealant shall be considered incidental to the item of concrete paving stone.

2900.3.16 - Site Clean-Up

The Contractor shall be responsible to maintain the construction site in a safe, clean and presentable condition at no expense to the Owner. The Engineer shall order the Contractor to clean up the site when necessary.

Upon completion of the project, the Contractor shall be responsible to remove any debris, materials, or structures within the project area. The Contractor shall restore, at his expense and in an acceptable manner, all areas which have been damaged by his operation. The Contractor shall leave the project area in a clean, neat and presentable condition.

2900.3.17 - Mailboxes

Mailboxes shall be reinstalled to the guidelines maintained by the United States Postal Service.

2900.4 - MEASUREMENT AND PAYMENT

2900.4.1 - Lawn Replacement

The quantity of lawn replacement shall be measured and paid for per square yard or lump sum for the type specified and placed. This shall be full compensation for furnishing topsoil, humus, sod, seed, stakes, fertilizer, and mulch; preparation and disposal; placing, water and maintaining as necessary to complete the work.

2900.4.2 - Trees and Shrubs

The quantity of plantings shall be measured and paid for per each unit installed. This shall be full compensation for furnishing, preparing, installing and maintaining as necessary to complete the work.

2900.4.3 - Concrete Paving Stone (Non-paved Area)

The quantity of paving stone shall be measured and paid for per square foot. This price shall be full compensation for all tools, equipment, labor, and materials to furnish and install Concrete Paving Stone including crushed aggregate base course, masonry sand base, filter fabric, sealer, cleaning, felt joint and incidentals necessary to complete the work.

2900.4.4 - Concrete Paving Stone (Paved Area)

The quantity of concrete paving stone shall be measure and paid for on the square foot basis. This price shall be full compensation for all tools, equipment, labor, testing and materials to furnish and install concrete paving stone including setting bed, adhesive, joint filler, expansion joint material, sealant, and cleaning and incidentals necessary to complete the work.

2900.4.5 - Concrete Split-Block Retaining Wall

The quantity of split-block retaining wall shall be paid for per square yard as measured along the face of the sloped wall, including the footing. This shall be full compensation for all excavation and preparation of foundation; for furnishing, hauling, and placing of the concrete block and concrete foot; for backfilling; compaction; and for all labor, tools, equipment, and incidentals necessary to complete the item of work in accordance with the requirements of the contract.

2900.4.6 - Solid Core Interlocking Block Retaining Wall

Solid core interlocking block retaining wall will be measured by the square foot of face of precast blocks in place from the top of the finished block to the bottom of any blocks below grade and will be paid for at the contract unit price per square foot. This price shall be full compensation for furnishing and delivering all required materials, including noncorrosive pins, noncorrosive anchor grid, foundation slab, butyl adhesive, perforated pipe underdrain, unperforated pipe underdrain, connections to outfall location, geotextile fabric, and granular material; for all necessary excavation and backfill; for installing block retaining wall as per the plan details, manufacturer's recommendations and these special provisions; for restoring the site to the finished details on the plans; and for all labor, tools, equipment and incidentals necessary to complete the work. Restoration will be paid for at the contract unit price.

2900.4.7 - Rip Rap

The quantity of rip rap shall be measured and paid for per cubic yard in place and shall be full compensation for furnishing, placing of fabric, pea gravel, and rip rap, labor, and incidentals necessary to complete the work.

2900.4.8 - Mailboxes

All costs associated with reinstallation of mailboxes shall be included in the lump sum bid for "Finishing Roadway."

2900.5 – DETAILS

CITY OF ALTOONA
SPECIFICATIONS

DIVISION 9900 - PAINTING STEEL STRUCTURES

9900.1 - DESCRIPTION

Painting metal structures shall consist of surface preparation, furnishing and applying paint, protection of and drying paint coatings, and protection of all property against any damage whatsoever resulting from these operations. The Contractor shall supply all equipment, tools, tackle, scaffolding, labor, materials and incidentals necessary for the completion of the work in accordance with the specifications.

9900.2 - MATERIALS

9900.2.1 - General

Paint and its ingredients shall conform to the requirements of these specifications for the type and kind specified. Paint shall be pre-mixed, ready for use, and shall be delivered to the place of use in the original containers, not to exceed 5 gallons in capacity. Where mechanical means for mixing and stirring are provided at the job site, paint may be furnished in 30 gallon metal containers. Each container shall be plainly marked with the name and address of the manufacturer, the type of paint contained, and the date of manufacture.

Ready-mixed paints shall not settle badly or cake in the container, and shall be readily broken up with a paddle to a smooth, uniform paint of good brushing consistency which shall dry without streaking, wrinkling, running or sagging when painted on smooth vertical surfaces.

9900.2.2 - Coating Systems (Elevated Water Tank)

9900.2.2.1 - General

Coatings shall be products of Tnemec. Tnemec products are listed below to establish a standard of type and quality. Colors will be selected by the City; tint intermediate coats to contrast with subsequent coat.

All paint shall be certified "non-lead" (less than 0.06% lead by weight in dried film) as defined by Part 1303 of Consumer Product Safety Act. Paint for use on inside wetted surfaces shall have been tested and certified in accordance with NSF 61.

9900.2.2.2 – Surface Preparation

Interior wet surface shall be prepared by near-white blasting (SSPC SP-10). Interior dry and exterior surface shall be prepared by commercial blasting (SSPC SP-6).

9900.2.2.2.1 - Interior Wet Surface Coating Application

(1) Prime: Tnemec Series 94-H2O Hydro Zinc at 2.5 to 3.5 mils DFT.

(2) Stripe Welded Seams: Tnemec Series 140 Pota-Pox Plus- Tank White 15 BL at 4.0 to 6.0 mils DFT.

(3) Intermediate: Tnemec Series 140 Pota-Pox Plus Beige 1255 at 4.0 to 6.0 mils DFT.

(4) Finish: Tnemec Series 140 Pota-Pox Plus Tank White 15 BL at 4.0 to 6.0 mils DFT.

(5) Total DFT: 10.5 to 15.5 mils DFT and 14.5 to 21.5 mils DFT on weld seams

9900.2.2.2.2- Interior Dry Surface Coating Application

(1) Stripe Weld Seams: Tnemec Series 140 Pota- Pox Plus- Tank White 15 BL at 4.0 to 6.0 mils DFT.

(2) Prime: Tnemec Series 140 Pota- Pox Plus- Tank White 15 BL at 4.0 to 6.0 mils DFT.

(3) Finish: Tnemec Series 140 Pota-Pox Plus Tank White 15 BL at 4.0 to 6.0 mils DFT.

9900.2.2.2.3 - Exterior Coating Application

(1) Prime: Tnemec Series 94-H2O Hydro Zinc at 2.5 to 3.5 mils DFT.

(2) Stripe Welded Seams: Tnemec Series 140 Pota- Pox Plus- Tank White 15 BL at 4.0 to 6.0 mils DFT.

(3) Intermediate: Tnemec Series 73 Endura Shield- Color Selected by Tnemec- at 2.0 to 3.0 mils DFT.

(4) Finish: Tnemec Series 700 HydroFlon - Color Selected by Owner at 2.0 to 3.0 mils DFT.

(5) Logo: Two Coats Tnemec Series 700 HydroFlon- Color Selected by Owner- at 2.0 to 3.0 mils DFT.

(6) Total DFT: 6.5 to 9.5 mils DFT and 10.5 to 15.5 mils DFT on weld seams and 10.5 to 15.5 mils DFT on logo area.

*Tnemec accelerators or fastcure products may be used when inclement weather drops below temperatures not suitable for application. Do not apply coatings when temperatures are below recommended application.

9900.2.3 - Submittals

The Contractor shall submit the following data to the Owner for review and approval at least two (2) weeks before any painting, coating or surface preparation will be undertaken.

(1) Name of manufacturer of coating material together with a fact sheet for each material to be used including the brand name, generic type, mil thickness, and application requirements and limitations.

(2) Color chart for Owner's approval.

(3) Where painting materials will come in contact with potable water, manufacturer shall provide current written acceptance for their coating system from the Wisconsin Department of Natural Resources.

(4) Contractor to submit detailed plan for containment for Owner’s approval.

9900.3 - CONSTRUCTION REQUIREMENTS

9900.3.1 - General

The surfaces of metal and steel parts to be coated or painted shall first be properly cleaned and prepared. The Contractor shall make special effort to contain the paint chips, sand particles, and paint droppings, hereinafter referred to as spent material, resulting from his cleaning, blasting or painting operations.

9900.3.2 - Protection of Finished Work and Equipment

The Contractor shall protect with tarpaulin or drop cloth all floors, walls, glass, finished painted work, exposed insulation, finished painted work and equipment from paint spats or other damage which may result from this work.

The site shall be kept in a clean and workmanlike manner at all times. The Contractor shall clean up any spent material at the completion of operations each day. The work will not be considered having been completed until the paint coats are in satisfactory condition, or until all

clean-up has been completed. Paint which has spilled, dripped or blown onto other parts of the structure shall be removed by methods and to the extent satisfactory to the Owner.

9900.3.2.1-Full Containment Protection

Abrasive Blast Residue Control:

(1) All external abrasive blast residue shall be contained
    a. Containment shall include shrouds from the ground surface to above all working areas and over the top of the tank.

(2) Containment shall conform to EPA requirements
    a. Containment shall be opaque, allowing daylight penetration.
    b. Containment shall be impervious and sections shall not permit escape of residue.
    c. Containment attachments on the exterior of the tank shell shall be removed following abrasive blasting and painting.

(3) All internal abrasive blast residue shall be contained. Residue shall be collected and disposed of as specified.

(4) The containment and the tank interior shall be evacuated by the use of dust collection equipment to prevent discharge of the dust to the atmosphere. Provide ENGINEER information on the proposed dust collection equipment for review.

Abrasive Blast Residue Disposal:

(1) All external abrasive blast residue shall be collected and stored in a bulk refuse container(s).
    a. Bulk refuse container(s) shall be lined with a waterproof impervious plastic liner to prevent spilling.
    b. Bulk refuse container(s) shall be protected by a waterproof cover to prevent rainwater from entering the container.
    c. The interior dry abrasive blast residue shall be kept separate from all other waste for the project.
    d. Construction waste shall be kept separate from abrasive blast residue.

(2) The above blast residue shall be disposed of by CONTRACTOR.
    a. Cost of the container procurement and placement at the site shall be by CONTRACTOR.
    b. Cost of testing of the containers for heavy metals, known as the Toxicity Characteristic Leaching Procedure (TCLP) shall be by CONTRACTOR.
    c. Cost of removal and disposal of the residue shall be by CONTRACTOR.
    d. Payment of container procurement, placement at the site, testing, removal, and disposal will be made from the allowance in the Bid.

9900.3.3 - Storage of Materials

Materials shall be stored in a safe place to protect them from fire and vandalism. All oily waste rags shall be properly disposed of each day and removed from the building. Paint or mixing cans shall not be placed on bare floors. Dirty, oily, and dusty covers shall not be used.

9900.3.4 - Surface Preparation Reference Standards

(1) Solvent Cleaning (SSPC-SP1)
(2) Hand Tool Cleaning (SSPC-SP 2)
(3) Power tool Cleaning (SSPC - SP 3)
(4) White Metal Blast Cleaning (SSPC-SP 5)
(5) Commercial Blast Cleaning (SSPC-SP6)
(6) Brush-Off Blast Cleaning (SSPC-SP7)
(7) Near-White Blast Cleaning (SSPC-SP 10)
(8) Power Tool Cleaning to Bare Metal (SSPC-SP-11)

9900.3.5 - Application

Application may be by spraying, brushing or rolling as recommended and approved by the manufacturer of the coating material. The Contractor shall follow manufacturer's instructions for the system being applied as it relates to temperature and atmospheric condition for proper application of the coating material.

All paint and coatings shall be applied in a neat and workmanlike manner producing a uniform, even coating. Film thickness will be determined by use of a wet film thickness gauge to be provided by the contractor and a dry film gauge after proper cure.

9900.3.6 - Ventilation

The Contractor shall provide adequate ventilation at all times during the coating, painting and drying operations. Ventilation must be adequate to remove fumes, prevent injury to workmen or the possibility of the accumulation of volatile gases.

9900.4 - STERILIZATION

9900.4.1 - General

Allow a minimum of seven days curing after last application of interior coatings before sterilizing tank or filling with water. Follow time and temperature requirements of manufacturer's product data sheets.

9900.4.2 - Testing and Chlorination

After waiting period, connect to tank and furnish, pump, and dispose of sufficient water for leakage test and sterilization. While under test, chlorinate tank in accordance with AWWA C652, Method 2 or 3. Flush tank with potable water. Repair leaks by gouging out defective areas and rewelding. No repair work shall be done on any joint unless the water in tank is at least 2 feet below point being repaired. Properly restore paint damaged by repairs

After sterilization and flushing, Contractor shall be responsible for obtaining two samples at 24-hour intervals that are bacteriologically safe. Repeat sterilization procedures until samples are satisfactory. Water required for the initial disinfection shall be furnished by the Owner. Any water required for subsequent disinfection will be paid for by the Contractor at the Owner's standard rate.

9900.5 - METHOD OF MEASUREMENT AND PAYMENT

9900.5.1 - Painting

Work will be measured and paid for at the contract Lump Sum price for "Painting." Such price shall be payment in full for cleaning the steel, for furnishing and applying the paint or coating material, clean up, and for furnishing all labor, tools, equipment and incidentals necessary to complete the contract in accordance with these specifications.

CITY OF ALTOONA

SPECIFICATIONS

DIVISION 16500 - STREET LIGHTING

16500.1 - DESCRIPTION

Work in this division shall consist of furnishing and installing a complete lighting system including luminaires, lamps, poles, transformer bases, conduits, cables, junction boxes, pull boxes, expansion fittings, concrete bases, and all incidental items to complete the work as shown on the plans.

Any material and labor not specifically covered by the plans and specifications that may be necessary to complete the Electrical Work (not specifically covered by others) shall be furnished without extra cost. The electrical work will not be deemed complete until all work is in proper operating order.

16500.2 - CODES AND STANDARDS

All work in this division shall conform to the requirements of comparable sections of the WSSHSC including section 651 - 657 except as modified within this specification.

All references in section to a metric unit of measure shall be converted to US Standard Measure Units in accordance with the table referenced on pages 751 – 754 of the WSSHSC.

All electrical materials and their installation shall conform to the latest requirements of the National Electrical Code (NEC), Wisconsin Electrical Code and accepted standards of good workmanship. All materials for which a standard has been established by the Underwriters Laboratories, Inc., shall have their label firmly attached.

16500.3 - DRAWINGS AND CORRELATION OF WORK

The construction drawings are to scale as noted. Location of the light poles shall be as close as possible to those shown on the electrical plans. Exact location will be specified and located by the Engineer in the field.

16500.4 - LIGHTING UNIT

16500.4.1 – General

Lighting units shall be as described herein and detailed on the drawings. Each unit shall be a complete unit with luminaire(s), lamp(s), bracket arm(s), pole or standard, breakaway base (when specified) concrete base, ground rod, all wiring within the unit, fusing, and other incidentals required for proper installation and operation. The completed lighting unit shall be designed to withstand all loads to which the unit will be subjected to in the field, including the loads attached to the lighting standard. Design factors in accordance with the AASHTO Specifications for the Design and Construction of Structural Supports for Traffic Signals, Signs, Highway Lighting, together with a wind pressure resulting from a wind velocity of 80 miles per hour plus gust factor shall be applied to all units.

16500.4.2 – Luminaires

16500.4.2.1 – Lighting Distribution

Luminaires shall be high pressure sodium units with medium full-cutoff distribution. The luminaires shall be of the required wattage and voltage as shown on the plans or in the special provisions of these specifications. The luminaires shall perform well within the defined limits of the Illuminating Engineering Society (I.E.S.) distribution. The luminaire shall be field-adjustable for the selection of standard I.E.S. patterns Type II and Type III. The luminaire shall be adjusted to Type II during installation unless otherwise noted on the plans. The luminaire shall be a General Electric MDRL xxSx or approved equal.

16500.4.2.2 – Luminaire Ballast Assembly

The luminaire shall be equipped with a ballast assembly which is hinged with a quick disconnect, and removable as a unit for easy installation and maintenance. Ballast assemblies shall be the high power factor type for operation on the specified number of volts, suitable for operation at -20 degrees F., and shall be an integral part of the luminaire.

16500.4.3 - Poles

16500.4.3.1 – Poles Standard

The pole shaft shall be round tapered galvanized steel or aluminum. The poles shall be furnished with a J-hook or similar device at the top of the pole near the bracket arm to provide strain relief for the cable as it leaves the bracket arm. A reinforced handhole shall be provided and the top of the pole shaft shall be equipped with a removable, ventilated cap held securely in place by at least one stainless steel set screw. Bracket arm lengths shall be as shown on the plans and the end of the arm shall have a mounting plate which will permit attachment and subsequent removal of the arm from the pole shaft.

16500.4.3.2 – Poles Breakaway

Poles designated on the plans as breakaway shall be mounted on a transformer base meeting the latest AASHTO Specifications for the Design and Construction of Structural Supports for Traffic Signals, Signs and Highway Lighting together with a wind pressure resulting from a wind velocity of 80 miles per hour plus gust factor. Transformer base castings shall be true to pattern in form and dimensions and shall be free from pouring faults, sponginess, cracks, sharp edges, blow holes and other defects in positions affecting strength and value for the service intended. They shall be installed in accordance with the manufacturer's instructions.

16500.4.4 - Pole and Bracket Lighting Cable

16500.4.4.1 – Pole Conductors

Conductors from the underground cable network to the luminaire shall be single conductor, stranded copper No. 12 AWG, RHH, RHW, Type USE, 600 volt, XLP insulated of the specified size. All conductors shall be continuous without splices from the luminaire to the underground feeder system or fuse assembly as appropriate. A sufficient length of conductor shall be installed in the pole shaft to permit removal of the fuse-holder a minimum of one foot from the handhole.

16500.4.4.2 – Fusing Assembly

At the handhole, there shall be an approved secondary in line 600 V fuse assembly with FNQ 3 2/10 ampere fuse. A separate in line fuse assembly shall be provided for each fixture and each receptacle. A two-pole waterproof fuseholder shall be used in 208, 240, 480 VAC, two wire systems.

16500.4.5. – Concrete Lighting Bases

This section shall conform to Section 654 of the WSSHSC and shall apply to all concrete bases for any type of traffic or lighting poles.

16500.5 - LIGHTING CONTROL CABINET

16500.5.1 - General

The lighting system shall be controlled from a lighting control cabinet. The cabinet shall include panelboards, enclosures, feeders, disconnects, breakers and all other components required for a complete installation. All materials shall meet NEMA, NEC, and State requirements.

16500.5.2 - Requirements

The ground mounted cabinet shall be a NEMA Type 3R minimum 30 inch by 16.5 inch enclosure. The size of the cabinet shall be such as to provide ample space for housing the control panel, and all of the associated electrical devices which are to be furnished. The lighting control cabinet housing shall be completely waterproof, constructed of heavy gauge aluminum of vandal-resistant construction with a hinged door above a removable lower panel of fifteen (15) inch minimum height and tamper-proof locking handle. The completed housing shall be suitably prepared inside and out to insure good bond between steel surfaces and paint primer. All surfaces shall be primed with phosphate treatment and primer. Exterior surfaces shall be finished with an approved synthetic epoxy enamel, or remain unpainted as specified in the Special Conditions. Interior surfaces shall be finished with a high gloss white enamel paint.

16500.5.3 - Disconnect Switches

Disconnect switches in the lighting control cabinet shall be heavy duty type. Fuse switches shall be heavy duty type with visible blades, quick-made, quick-break operating mechanism, with full cover interlock and indicator panel. Sizes, voltage, and fusing shall be as shown on the plans.

16500.5.4 - Controls

Furnish and install control relays, photocontrol by-pass switch, photocell and manual control switch in the control cabinet. The system shall be controlled by photocell. The photocell shall be weatherproof and tamper-proof, Tabet 9600 or G.E. C 420 G005 or equal, and shall be mounted on the lighting cabinet.

16500.5.5 - Grounding

A ground rod and grounding shall be provided at the lighting control cabinet.

16500.5.6- Service Supply

The contractor shall arrange for the electrical power source in the City of Altoona's name in a timely manner to ensure operation prior to the contract completion date. The cost of the service installation shall be paid for by the contractor.

16500.6 - UNDERGROUND CABLE & GROUNDING

16500.6.1 - Underground Cable

The underground system shall consist of 8 AWG single cross-linked polyethylene insulated stranded copper conductors, unless a larger size conductor is noted on the plans or in the estimated materials chart in the Special Provisions. The conductor shall be Type USE, RHH,RHW, 600 volt which shall meet the requirements of IPCEA-NEMA Standards S-66-524. The insulation thickness shall be nominal 0.060 inch.

All cable shall be installed in conduit or duct as noted on the plans. Cable shall be terminated with a splice connection only in an above ground enclosure. No splices shall be permitted underground.

16500.6.2 – Grounding

A bare copper ground wire shall be installed originating at the systems service connection extending to the farthest luminaire. The grounding conductor shall be secured to the grounding connection at each luminaire pole or outlet. A 5/8-inch by 8-foot copperweld ground rod shall be installed at each ground mounted lighting unit. Installation and connections to units shall be as shown on the plans.

Where sections of isolated rigid metal conduit systems have been installed, a grounding bushing shall be installed on the termination of the conduit system and same shall be connected to the grounding conductor.

16500.6.3 - Conduit

All conduit installed exposed or above grade shall be metallic. Metallic conduit shall conform to the requirements of the American National Standards Institute, Inc., specification for rigid steel conduit, Zinc coated, ANSI Designation C 80.1. All buried conduit shall be nonmetallic. Nonmetallic conduit and fittings shall be polyvinyl chloride (PVC) electrical conduit conforming to the requirements of Underwriters' Laboratories Standard for Rigid Nonmetallic Conduit, UL 651, for Schedule 40 heavy wall type.

All buried conduit shall be installed at a depth of not less than 18 inches below the finished grade of any paved area and 24 inches below the finished grade of any unpaved area. The general location of the cable is shown on the drawings. Contractor may locate conduit in a manner to avoid obstructions or to preclude damage to the conduit resulting from subsequent construction operations.

16500.6.4 - Cable-in-Duct

Cable indicated on the plans to be install in duct shall be enclosed in a coilable polyethylene duct, suitable for direct earth burial, which shall be manufactured from high density polyethylene that meets the requirements as defined in the Specifications for Polyethylene Molding and Extrusion Material, ASTM D-1248, Type III, Grade P 34, Class C, Category 5.

16500.7 - REMOVE TRAFFIC / LIGHTING UNIT

16500.7.1 – General

This item consist of removing the existing sign bridges, lighting poles, and traffic poles within the project site and transporting them to a temporary storage yard.

16500.7.2 – Preconstruction Activities and Inspection

Prior to construction the Engineer and contractor shall determine which poles are to be salvaged and which poles are to be removed from the project site. The poles shall be clearly marked with tape and a number to determine the future location of the salvaged poles.

Prior to any pavement or sidewalk removal, the contractor shall disconnect all electrical power in the construction zone.

16500.7.3 – Pole Ownership

All poles removed from the site are to remain the property of the City of Altoona. The condition of all poles shall be documented with the Engineer prior to the removal. Any damage to the poles shall be repaired or replaced at the discretion of the engineer with no additional compensation.

16500.7.4 – Storage Location

Those poles to be salvaged may be transported to the City of Altoona Public Works Garage or to a secure location of the Contractors choice. Storage of the poles at this location is done so at the Contractor's own risk. Any damage to the poles shall be repaired or replaced at the discretion of the engineer with no additional compensation.

16500.8 - INSTALL STREET LIGHT FROM SALVAGE

16500.8.1 – General

This item shall consist of installing the street lights removed per Section 16500.6 of the General Specifications. The contractor shall supply all labor, materials, and equipment to

install the street light including the concrete base, anchor bolts, grounding rods and other miscellaneous items to complete the lighting units and activate them to working order.

If the poles are to be installed on an existing concrete base, the bolts and nuts of the concrete base must be cleaned of all corrosion and debris prior to the installation of the pole

16500.9 - BASIS OF PAYMENT

The Estimate of Quantities for the street light system as shown in the special provisions of these specifications are listed only for the convenience of the Contractor and shall not be construed as the exact quantities necessary for the completion of the work.

16500.9.1 - Lighting Unit (Installed)

Lighting unit (installed) will be measured and paid for as unit of each installed in place, including luminaire(s), lamp(s), bracket arm(s), pole or standard, breakaway base, (when specified) and concrete base. Ground rods, fusing, and other incidentals required for proper installation and operation shall be considered incidental to the bid price with no additional compensation made to the Contractor.

16500.9.2 - Lighting Unit (Spare)

Lighting unit (spare) will be measured and paid for as a unit without installation. Luminaire(s), bracket arm(s), pole, and breakaway base shall be paid for as a unit of each.

16500.9.3 - Street Lighting System

All work for the street light system, excluding the Lighting Units as described herein, will be paid for at the unit prices, complete in every detail and for furnishing all equipment, tools, labor, service establishment, and incidentals necessary to complete the work in accordance with the contract.

16500.9.4 – Remove Traffic / Lighting Unit

All work for removing the Traffic / Lighting Unit including all labor, equipment and tools to perform inspection, removal and transporting the poles to the specified location and other incidental items associated with the removal shall be paid as a unit of each.

16500.9.5 – Install Street Light from Salvage

All work for Installing Street Light from Salvage transporting and installing the pole, including labor, equipment, shims, nuts, grounding wires, washers and other incidental items required to make the lighting system / traffic system function shall be paid as a unit of each

CITY OF ALTOONA

SPECIFICATIONS

DIVISION 16570 – TRAFFIC SIGNALS

16570.1 - DESCRIPTION

Work in this division shall consist of furnishing and installing the components of a traffic signal system including conduit, pull boxes, concrete and transformer bases, electrical wiring, electrical service, poles and standards, traffic signals, traffic controllers, traffic signal cabinets, traffic pre-empt systems, and all incidental items to complete the work as shown on the plans.

Any material and labor not specifically covered by the plans and specifications that may be necessary to complete the Electrical Work (not specifically covered by other items) shall be furnished without extra cost. The traffic signals system will not be deemed complete until all work is in proper operating order.

16570.2 - CODES AND STANDARDS

All work in this division shall conform to the requirements of comparable sections of the Wisconsin Division of Highway Standard Specifications for Highway and Structure Construction, (WSSHSC) including section 651 - 657 except as modified within this specification.

All references in section to a metric unit of measure shall be converted to US Standard Measure Units in accordance with the table referenced as Conversion Table SI Metric to U.S. Standard Measure of the WSSHSC.

All electrical materials and their installation shall conform with the latest requirements of the National Electrical Code (NEC), Wisconsin Electrical Code and accepted standards of good workmanship. All materials for which a standard has been established by the Underwriters Laboratories, Inc. shall have their label firmly attached.

16570.3 - DRAWINGS AND CORRELATION OF WORK

The construction drawings are to scale as noted. Location of the poles shall be as close as possible to those shown on the electrical plans. Exact location will be specified and located by the Engineer in the field.

16570.4 – TRAFFIC SIGNAL SYSTEM

16570.4.1 – General

The traffic signal system shall be as described herein and detailed on the drawings. Each traffic system shall be a complete unit with conduit, pull boxes, concrete and transformer bases, electrical wiring, electrical service, poles and standards concrete base, ground rod, all wiring within the unit, fusing, and other incidentals required for proper installation and operation of the system. The completed traffic signal unit shall be designed to withstand all loads to which the unit will be subjected to in the field, including the loads attached to the signal standard. Design factors in accordance with the AASHTO Specifications for the Design and Construction of Structural Supports for Traffic Signals, Signs, Highway Lighting, together with a wind pressure resulting from a wind velocity of 80 miles per hour plus gust factor shall be applied to all units.

16570.4.2 - As-built Diagrams

The contractor shall supply the Engineer with a final wiring diagram showing each conductor route, and the conductors used for each signal face or pedestrian button.

16570.4.3 - Shop Drawings

The Contractor shall provide for the Engineers approval 6 copies of shop drawings for all traffic signal and lighting equipment. The Contractor shall not order any equipment until the shop drawings have been approved by the Engineer.

16570.4.4 – Standard Traffic Components

All conduit, pull boxes, concrete and transformer bases, electrical wiring, electrical service, poles and standards concrete base, ground rod, all wiring within the unit, fusing, and other incidentals required for proper installation and operation of the system shall meet the requirements of Section 16500 of the General Specifications.

16570.4.5 - Traffic Controller with Cabinet as Specified

16570.4.5.1 – General

This work shall consist of furnishing and installing traffic signal controllers as shown on the plans and as hereinafter provided.

The contractor shall deliver the completely wired controller cabinet, which is ready for installation, including all required traffic signal control equipment, and any auxiliary equipment, wiring diagrams, and manuals as called for in the specifications, to the project site.

16570.4.5.2 – As-Built Drawings

The contractor shall submit two copies to the Engineer of the following: Detection wiring diagrams, cable and routing diagrams, pole to pull box wiring diagrams, conductor layout standards and the associated head arrangements and other pertinent details.

16570.4.5.3 – Cabinet Testing

After the contractor has mounted the cabinet on the cabinet foundation, he shall connect all the field wiring inside the controller cabinet and test the signal circuits for correct operation. The contractor shall connect and test the signal circuits outside the controller cabinet as directed by the engineer. Connecting and testing signal circuits shall be considered part of this item of work.

16570.4.5.4 – Controller and Cabinet Requirements

The controller shall be a fully traffic actuated, solid state, digital microprocessor controller, Eagle EPAC 300, generation M-40 or later, capable of providing the number and sequence of phases, overlaps, and any special logic as described herein and shown on the accompanying plan.

The controller shall be fully programmed and shall be mounted in a control cabinet to operate as a complete and functioning intersection traffic signal control system. The equipment items included shall be, but not necessarily limited to, cabinet, microprocessor controller, monitor, detector amplifiers, power supply, power distribution panel, interior cabinet wiring, and other associated electrical and electronic equipment interior to the control cabinet that is necessary to provide the type of operation described in these specifications.

Dual ring, programmable for both single and dual entry concurrent timing, eight-phase frame or equivalent shall be provided. Volume density and pedestrian timing shall be provided for all phases. MUTCD flashing capability shall be provided. All controls shall be in accordance with the accompanying plans and with NEMA Standards Publication No. TSl-1976 including Revisions No. 1 and No. 2.

The intersection controller unit shall be capable of up to 8-phase operation plus four (4) programmable overlaps regardless of whether preemption, coordination or the special

programming is used. The intersection cabinet shall be wired for a minimum of twelve and include six 3 circuit load switches.

16570.4.5.5 – Controller Electrical and Operational Aspects

16570.4.5.5.1 – Buffering

All logic circuit inputs shall be internally buffered to withstand transients and noise, such as might result from normal usage, without damage to any mechanism components.

16570.4.5.5.2 – Timing Features

All controller timing parameters shall be fully programmable from the front panel using switches and/or keyboard inputs, and memory storage features shall be nonvolatile under power off conditions for at least 30 days. The locking, nonlocking detection mode and recall switches shall also be accessible on the front panel.

16570.4.5.5.3 – Minimum Green Time

The passage timer shall time concurrently with the minimum green timer, so that the duration of the minimum green time is directly adjustable and is independent of the passage time setting.

16570.4.5.5.4 – Dual Ring Timing

In the dual ring application, no more than two phases shall be permitted to time concurrently, and no more than one phase per ring. The controller shall provide barrier protection against concurrent timing of two conflicting phases; no phases assigned to one side of the barrier shall be permitted to time concurrently. The controller shall service calls on a single entry basis, and both rings shall cross the barrier simultaneously in accordance with the following logic:

(a) Phases timing concurrently shall terminate simultaneously if both have a gap out due to excessive time between actuations.
(b) Phases timing concurrently shall terminate simultaneously if both have a maximum time out.
(c) In the event that one phase has not achieved a gap out or maximum time out, the other gapped out phase shall be permitted to leave the gapped out condition and retime an extension when an actuation is received.

16570.4.5.5.5 – Manual (Police) Control

If manual control is used, actuation of the manual control shall permit manual advance of the Walk, Pedestrian Clearance, and Green interval terminations only. Manual termination of Yellow or All Red clearance intervals shall not be permitted.

16570.4.5.5.6 – Red Revert

An adjustable red revert control shall be provided to assure adequate red display when recycling a phase during call-away or red rest mode operation. A call for service to a different phase shall be preceded by an all-red clearance interval, as programmed.

16570.4.5.5.7 - Coordination

The controller shall be capable of operation in progressive coordination systems and mutual coordination and shall contain, but not be limited to, the following external inputs, with all functions brought out:

- Vehicle/Pedestrian Detectors per phase
- Phase Omit per phase
- Omit Red Clearance per ring
- Maximum II per ring
- Stop Timing per ring
- Select Minimum Recall per controller
- Semi-Mode per controller
- Pedestrian Omit per phase
- Hold per phase
- Internal Maximum Inhibit per ring
- Red rest per ring
- Force-Off per ring
- Manual Control per controller
- External Start per controller

16570.4.5.5.8 – Minimum Safe Timings Control

Controllers shall not accept any operator input or stored timing parameters that would result in intervals shorter than the following: yellow clearance - 3.0 seconds, minimum walk - 4.0 seconds, minimum pedestrian clearance - 6.0 seconds. At the beginning of each of the above intervals, the controller shall check the previously stored data against these minimums. If an operator attempts to load an incorrect timing parameter, the controller unit shall output a unique error code on the front panel display. As an alternate to minimum timing control, a coded keyboard entry security feature may be provided.

16570.4.5.5.9 – Indicator Lights and Switches

Indicator lights shall be provided to show the status of each signal phase on. Indicator lights shall also be used to show interval status, phase termination information, and presence of

vehicular and pedestrian calls for each phase. An indicator light shall also be provided to show the status of the backup battery charging circuit.

16570.4.5.5.10 – On/Off Switch and Fuse

The controller shall have an on off switch and fuse for AC power.

16570.4.5.5.11 – Data Display

If keyboard entry is supplied the front panel shall contain a display panel consisting of LED display characters. The face of the display shall be scratch, chemical, and solvent resistant. In the case of writing data or parameters into the controller there shall be a visual indication that the data has been accepted. The number of characters shall be adequate to read or write all data and parameters in decimal format together with a data descriptor in either alpha numeric format, or thumbwheel switch display.

16570.4.5.5.12 – Diagnostic Program

A diagnostic program shall be prepared by the manufacturer of the controller unit which will demonstrate the proper operation of all the inputs, outputs, controls and indicators in the controller, and shall have visual conformation on the front panel. The diagnostic program shall be either resident in the controller or furnished as a separate plug in module. A flow chart and listing of the diagnostic routine shall be furnished with the controller unit.

16570.4.5.5.13 – Maintenance of Controller

For ease of service, the controller shall be divided to a minimum of the following separate circuit boards:

a) CPU/Memory
b) Input/Output
c) Front Panel
d) Power Supply

Each board must be easily removable without requirements for special tools.

The microprocessor supplied shall be the type that has a Fluke Pod that is compatible.

All electronic components must be removable by a PACE (model PPS-5) solder station and all integrated chips over 20 pins must be on sockets.

16570.4.5.6 – Monitoring

16570.4.5.6.1 – Monitor Requirements

A NEMA PLUS monitor with all components and circuitry, independent to the controller and having the capacity to handle a minimum of 12 channels shall be provided. The monitor shall detect conflicting indications, controller voltage drops, and the absence of reds as follows:

a) Conflicting indications shall cause the monitor to place the intersection in a flashing mode of operation. The monitor shall maintain the flashing mode until manually reset, regardless of 110 VAC power to the conflict monitor.

b) The +24 VDC cabinet power source shall be monitored by the conflict monitor. If that voltage drops to an unsatisfactory level, the monitor shall cause the controller to revert to flashing mode. Upon resumption of normal voltages, the controller shall resume normal stop and go operation without the necessity of manual resetting.

c) The absence of any required red signal voltage at the field connection terminals in the controller assembly shall cause the monitor to place the intersection in a flashing mode of operation. The monitor shall maintain the flashing mode until manually reset.

d) After power interruption (exceeding 457 +/- 25 milliseconds) to the controller assembly a flashing period (4 to 10 seconds adjustable) shall precede the start up (initialization) sequence. This feature can be resident in either the monitor or the controller.

e) The flash circuit shall be wired in a failsafe manner so that the intersection will revert to and remain in flashing mode whenever and for as long as either the controller mechanism or the monitor is disconnected.

16570.4.5.6.2 – Indicator Lights

Indicator lights shall be:

a) indicator for each channel shall be provided with latch status of failure
b) +24V light inputs
c) conflict light
d) conflict monitor power light and program board ajar light
e) power interrupt after failure light
f) red failure light

16570.4.5.6.3 – G or W vs. Y Signals on Same Channel

This function shall be enabled on a per unit basis. When enabled, the conflict monitor shall be capable of monitoring for green or walk versus yellow indications active on one channel. It shall be recognized as a failure if the condition exits for 850 +/- 150 milliseconds. This failure shall always be considered a latched failure when enabled.

16570.4.5.6.4 – G, W, or Y vs. R Signals on Same Channel

This function shall be enabled on a per channel basis. When enabled, the conflict monitor shall be capable of monitoring for green or walk or yellow versus red indications active on one channel. It shall be recognized as a failure if the condition exists for 850 +/- 150 milliseconds. This failure shall always be considered a latched failure when enabled.

16570.4.5.7 – Terminal Facilities

Terminal facilities shall consist of all devices external to the controller unit which are necessary to complete the intersection control. Terminal facilities supplied shall be protected by dual 30 amp circuit breakers. The dual 30 amp breakers shall feed an evenly split signal bus supplied through bus relays and radio interference line filters. Bus relays, in all cases, shall be mercury type contractors and shall not be jack mounted. Terminal facilities shall also include applicable load switch panels of sufficient capacity to accommodate 8 vehicle phases, 4 pedestrian phases, and 4 overlap phases and shall include a minimum of 6 solid state 3 circuit load switches with visual indicators. Flash transfer relays and two double circuit flashers shall also be provided. The internal wiring in the load switch panels shall be insulated wiring of sufficient size or the individual outputs fused so that the wiring will not be damaged by shorted output light circuits. Printed circuits in the load switch panels will not be acceptable.

Terminal strips shall be used to terminate controller cable, signal head cables and vehicle and pedestrian detector cables. All controller inputs and outputs shall be terminated on an interface panel. All interface and output terminal connections shall be the screw down type.

All interconnect terminal facilities shall be fused to incoming lines.

16570.4.5.8 – Cabinet Switches

16570.4.5.8.1 – Maintenance Panel

The following switches shall be located inside the cabinet on a maintenance panel:

a. Controller On/Off

b. Cabinet Light
c. Stop Time (Three Position)

POSITION	LABEL SWITCH	FUNCTION
Upper	Stop Time	Place stop time on the controller
Center	Run	Remove the stop time input to the controller
Lower	Normal	Connects the Monitor to the controller stop time input

Switches shall be provided for all vehicle phases and all even pedestrian phases.

16570.4.5.8.2 – Police Access Door

The following switches shall be located behind the Police access door:

a. Signal/Off
b. Flash/Normal

The above switches shall function as follows:

	Signal	Off
Flash	Signals Flash	Signals Dark
Normal	Signals Normal	Signals Dark

16570.4.5.8.3 – Manual Detector Operation

Three position switches shall be provided external to the controller which will permit manual detector calls and manual detector disconnect for each phase independently. The switches shall be spring-loaded and shall rest in the center (non-operative) position. The switches shall be appropriately labeled and shall operate as follows:

Upper Position:	Spring loaded:	Disconnect detector
Center Position:	Normal detector operation	
Lower Position:	Spring loaded:	Test call is placed to controller.

16570.4.5.9 - Cabinet and Cabinet Equipment

1) The controller shall be furnished completely housed in a door-in-door ground mounted (without anchor bolts) metal cabinet of minimum size 1115 mm wide, 685 mm deep, and 1495 mm high.

2) The cabinet shall be of clean-cut design and appearance. The size of the cabinet shall be such as to provide ample space for housing the controller, and all of the associated electrical devices which are to be furnished with the controller, together with any other auxiliary devices herein specified.

   All cabinets shall have the following:

   a) A 15 amp circuit breaker for auxiliary equipment.

   b) A 20 amp circuit breaker for street lighting.

   c) A valve type surge protector, as manufactured by Joslyn, catalog #L9200-10; General Electric, catalog #9L15DCB002; or approved equal, shall be mounted internally within the traffic signal cabinet and shall be connected across the load terminals of the circuit breakers. A General Electric Varistor, catalog #V130PA20A, shall be installed at the load terminals of each circuit breaker from the hot line to the grounded current carrying neutral conductor.

   d) Incandescent light socket.

   e) Solid state jack mounted NEMA flasher(s) with visual indicators and completely wired base, rated for at least 10 amps per circuit at 74 degree C.

   f) Control switches, including controller power switch, stop time switch, cabinet light switch, emergency flash switch.

   g) All switches specified in Section C-8 and F.

   h) Necessary fuses and circuit breakers.

   i) All wiring harnesses including detector harnesses. Loop detector harness connector shall be MS-3106B018-lS fully wired terminals I and J which shall go to separate isolated terminals. One loop harness shall be provided for each of the phases (i.e. 01 - 08).

j) Duplex power receptacle. A 120 VAC 20 amp, NEMA 5-20R GFl convenience outlet shall be mounted in each cabinet for energizing equipment or tools. The outlet shall be fuse protected.

k) Radio interference filter. Each control cabinet shall be equipped with a single radio interference suppressor of sufficient ampere rating to handle the load requirements. The RIS shall be installed at the input power point. It shall minimize interference in both the broadcast and the aircraft frequencies, and shall provide a maximum attenuation of 50DB over a frequency range of from 200KHZ to 75MHZ, when used in connection with normal installations. The radio interference suppressor shall be hermetically sealed in a substantial metal case which shall be filled with a suitable insulating compound. The terminals shall be nickel-plated brass studs of sufficient external length to provide space to connect two No. 8 AWG wires and shall be so mounted that they cannot be turned in the case. Ungrounded terminals shall be properly insulated from each other, and shall maintain a surface leakage distance of not less than 6.35 mm between any exposed current conductor and any other metallic parts. The terminals shall have an insulation factor of 100-200 megohms dependent upon external conditions. The RIS shall not be rated less than 35 amperes. The RIS shall be designed for operation on 115 VAC"10%, 60HZ, single phase circuits, and shall meet the standards of UL and Radio Manufacturer's Association.

l) Cabinet grounding. In all controller cabinets and auxiliary cabinets, the AC common, the logic ground, and the chassis ground shall be isolated from each other the same as detailed by NEMA Standard.

m) Suppressors. Each 120 VAC circuit that serves as inductive device, such as a pan motor or a mechanical relay, shall have a suppressor to protect the controller's solid -state devices from excessive voltage surges. Such suppressors shall be in addition to the surge protector at the input power point.

3) All conductors in the cabinet shall be number 22 AWG or larger, with a minimum of 19 strands, and conforming to military specifications, Mil-W-16878D, Type B or D, vinyl nylon jacket, 600 volt, 105 degree C. All cabinets shall be factory wired.

4) The cabinet shall provide weather protection and forced ventilation, air filters and heaters, with adjustable thermostat switches, and comply with the environmental and operating standards outlined in NEMA Specification TSI-1-1976. The cabinet

shall provide reasonable vandalism protection. Access doors shall be provided with latches and a corbin lock, dust cap, and key change IR6380. The small door shall be provided with standard police locks. The heater supplied shall have adjustable thermostat setting which varies from 0 degree to 40 degree.

5) Forced Ventilation. Controller cabinet containing solid state equipment shall be ventilated by means of a 120 VAC, 60HZ, tube axiac compact type fan. The fan's free delivery air flow shall be greater than 2.83 cubic meter per minute. The magnetic field of fan motor shall not affect the performance of control equipment. The fan bearings shall operate freely. The fan unit shall not crack, creep, warp or have bearing failure within a 7 year duty cycle. The maximum noise level shall be less than 40 decibels. The fan unit shall be corrosion resistant. The thermostat's turn on setting shall be adjustable from 32 to 49 degrees Celsius. The fan shall run until the cabinet temperature decrease to approximately 17 degrees C. below the turn on temperature setting. The fan shall be fused.

6) Metal shelves shall be provided to support the controller and external equipment. The controller shall be located on the top shelf and not less than 965 mm above the bottom of the cabinet. There shall be a minimum of 250 mm vertical height for detector units.

7) Buss and flash transfer relays, flashers, load switches, circuit breakers, and interference filters shall be located on a standard panel consistent with he intersection plan. Design shall facilitate field inspection and maintenance accessibility without excessive disassembly or special tools.

8) All cabinet inside and outside surfaces shall be primed with phosphate treatment and primer. After priming, all exterior surfaces shall receive a minimum of 2 coats of rust resistant silver grey enamel and interior surfaces shall be furnished with rust resistant high gloss white enamel.

9) Any cables, wires or circuits which are not being used shall be neatly folded and shall be capped. These wires shall be neatly tied and stowed away in or on the terminal facilities.

10) Terminal facilities arrangement shall be in a fashion so that trouble shooting of load bay or behind the load bay can be accomplished with simple tools. This means that the load bay will be hinged so that it can be dropped down for ease of maintenance. There will be sufficient slack in the load bay wiring to allow for dropping the load bay.

11) All control cables (i.e. detector harnesses, controller harnesses, harnesses which connect manual/vehicle detector switches) shall be protected by a nylon jacket or equivalent protection to prevent any contact with cabinet metal shelves, doors and any other sharp corners.

12) If any branch circuit wiring or control wiring does not conform to the wire specifications, the supplier will be considered as not meeting the specifications and proper corrective action will be exercised against the supplier.

13) Provide a 4 input PED (pedestrian) isolation circuit to isolate controller logic ground from the field wiring. Outputs from the PED isolator shall be connected to phases 2,4,6,8.

16570.4.5.10 - Solid State Load Switches

Load switches shall meet the requirements of NEMA TSl-Part 5 for three circuit load switches.

Each load switch shall contain three individually replaceable, molded case, solid state relay modules. Each relay module shall utilize optical isolation between the control and the load circuits. The module shall have the functions and terminal assignments as specified in NEMA TSl-Part 5.

Each panel of load switches shall either be rack mounted or shall have a switch support bracket extending across the entire length of the switch panel.

The load bay arrangement from left to right in the cabinet shall be as described below:

1) Vehicular Phasing shall be grouped first - 0l, 02, 03, 04, 05, 06, 07, 08.

2) Pedestrian Phasing shall be followed second - 02, 04, 06, 08.

3) Any other special phasing shall be grouped last.

16570.4.5.11 - Equipment List and Drawings

Detailed shop drawings of the control cabinet, equipment layout drawings and wiring diagrams of all equipment installed in the controller cabinet shall be submitted to the Engineer

for approval. Two sets of cabinet wiring diagrams shall be contained in a heavy-duty clear plastic envelope mounted on the inside of the front door.

At the time of delivery, the contractor shall furnish one set of instruction manuals and an itemized price list for each type of equipment, their subassemblies, and their replacement parts. The instruction book shall include the following information:

a) Table of Contents
b) operating procedure
c) step-by-step maintenance and troubleshooting information for the entire assembly
d) circuit wiring diagrams
e) pictorial diagrams of parts locations
f) parts numbers
g) theory of operation

The instructional manuals shall include itemized parts lists. The itemized parts lists shall include the manufacturer's name and parts number for all components (such as IC', diodes, switches, relays, etc.) used in each piece of equipment. The list shall include cross-references to parts numbers of other manufacturers who make the same replacement parts.

16570.4.5.12 – Warranty

The contractor shall certify that the equipment meets the required specification and shall supply a complete catalog description. The following documents shall also be provided:

a) A warranty statement which stipulates that equipment to be supplied shall be warranted for two years from the date of purchase
b) Operations manuals
c) Maintenance manuals
d) Schematic diagrams
e) Component and equipment locations within the cabinet

If a malfunction in the controller unit, or its auxiliary equipment occurs during the warranty period, the supplier shall, within 24 hours after notification (excluding Saturday and Sunday), furnish a like controller unit module, or auxiliary equipment, for use while the warranted unit is being repaired. The isolation of any malfunction during the warranty period shall be the responsibility of the supplier. After the supplier has repaired and returned the equipment, the Department shall then return the spare component to the supplier.

16570.4.5.13 – Preemption

These specifications detail a preemptor program for use with 2 through 8 phase actuated controller. The preemptor shall be capable of being adaptable to meet the various types of applications such as railroad, fire station, and bridge preempts.

The preemptor shall be internal to the controller and shall not alter controller capability or interchangeability under normal operation. The preemptor shall be completely programmable by the user.

a) Preempt Registration. The preempt call input shall initialize preempt registration and start preempt sequence unless a priority call input is activated which would treat the current controller preemptions state as normal operation and reinitiate call registration.

b) Preempt Delay. As soon as the preempt call is registered the preempt delay will begin timing unless preempt delay is set zero or preempt delay omit was active during preempt call registration. Delay shall be programmable from 0 to 255 seconds minimum.

c) As soon as preempt delay is timed out, current running phases not next to be common in preempt sequence are cleared. If the running phases are green and must be cleared, special programmable values of minimum green, walk and pedestrian intervals will time normal times. Concurrently a special preempt clearance is generated. This clearance is designed for advance track signals and any overlaps that may be green and require yellow clearance.

d) Entry Clearance Phase(s) Select. Two sequential phases or phase pairs shall be available to be run as programmable fixed time intervals as an entry sequence. Two entry options shall be available, each programmable. The entry sequence shall be capable of being omitted entirely.

e) Dwell Sequence. After the entry sequence, the preemptor shall enter the dwell sequence. During the dwell sequence the controller shall cycle between selected phases on a pre-timed or actuated basis. Pedestrian phasing may be normal or omitted entirely. When the dwell sequence is entered, a preempt dwell output shall be generated. The preemptor shall remain in dwell for the length of the dwell extension timer which shall be capable of being held in reset by the preempt call input. Dwell extension shall be omittable by setting the timer to zero.

f) Exit Sequence. After leaving dwell, the controller shall enter one or two programmed exit phases(s) or phase pairs sequences. The sequence will time

programmed minimum green and place a vehicle call on all phases not omitted. After timing exit phase minimum green the controller shall time and sequence normally.

16570.4.5.14 – Time Base Coordination

These specifications detail a Time Base Coordinator program for use with 2 through 8 phase actuated controller.

The units shall allow traffic control equipment to be coordinated without requiring the use of interconnection cables. The units shall coordinate traffic control equipment based on signals from a precise time base which will allow output control signals to be changed at the proper pre-programmed time to achieve the coordinated operation of an intersection with other intersections or the desired operation of an isolated intersection. The coordinators may also use a programmer for a master intersection controller which in turn is interconnected with secondary intersection controllers. The units shall also be capable of providing a command for MUTCD flash, and shall allow a full year program to be initiated and carried out without the necessity of field adjustment for anticipated special events, etc.

The time base coordinator shall be internal to the controller and shall not alter controller capability or interchangeability under normal operation. The time base coordinator shall be completely programmable by the user.

16570.4.5.15 – Loop Detector Amplifiers

16570.4.5.15.1 – Materials and Construction Methods.

All loop detector amplifiers supplied shall be two channel shelf-mounted units with digital output timing, and sequential scanning. The amplifier shall operate in compliance with all the requirements specified herein, when connected to an inductance loop plus lead-in of from 0 to 1000 microhenries with a loop parameter as low as 5.0 at the amplifiers operating frequency.

Each channel shall be self-tuning and shall be fully operational within one minute after power up. After a power interruption, the channel shall automatically return to normal operation. Two conventional single channel front panel mounted MS3102a18-lP connectors for each amplifier shall be provided.

Each channel shall have a fail safe design such that if the loop sensor circuit is broken, the channel shall output a continuous vehicle call.

The loop sensor shall be coupled to the channel input circuitry through isolation transformers. This arrangement shall provide continued operation of the channel even if the loop sensor in the street develops resistive leakage or becomes grounded.

Each amplifier shall have lightning protection as an integral part of its own circuitry. The protection shall enable the detector to withstand the discharge of a 10 microfarad capacitor, charged to + 1000 volts. The discharge shall be applied directly across the detector loop input pins with no loop load present. The protection shall also enable the detector to withstand the discharge from a 10 microfarad capacitor, charged to l to 2000 volts. The discharge shall be applied directly across either the detector loop input pins or across either side of the loop input pins to earth ground. For this test, the detector chassis shall be grounded and the detector loop input pins shall have a 5.0 ohm dummy resistive load connected across them.

The detector circuits shall be so designed that changes due to environmental drift and applied power shall not cause an actuation. The detectors shall be capable of compensating or tracking for an environmental change of up to but not exceeding 1 x 10 minus 3% charge in inductance per second. This requirement must be met within two hours after initial application of operating power.

Each detector channel shall have a minimum of three sensitivity settings and these shall be front panel selectable. The most sensitive setting shall respond to an inductance change of 0.02%. The least sensitive setting may be chosen by the manufacturer such that accurate and repeatable occupancy measurements may be obtained. This setting must cause the detector channel to respond to a 0.14-0.4% charge in inductance.

Each detector channel shall have a front panel mounted indicator to provide a visual indication of each vehicle detection. A detector channel shall not cross talk with any other channel within the same module.

The unit shall operate over input voltage from 95VAC to 135VAC and shall neither originate nor be sensitive to electrical transients in excess of proposed NEMA standards. Varistors shall be provided between power lines to limit transient voltages.

Extension and delay timing shall be provided for each channel independently as described below:

1) Delay Timing: Delay detector output for selected interval of l to 30 seconds in 1 second increments. Each new detection restarts the delay timer.

2) Extension Timing: Extends vehicle calls up to 7.75 seconds in 0.50 second increments.

3) Green Gating: Green signals from the controller shall be wired to the detector to modify timing functions. When green is true, delay timing is disabled. When green is false, extension timing is disabled. The green input signals may be DC or direct line voltage AC.

4) Smart Indicators: Normal indicator operation is provided when neither timer is active. Delay and extensions are distinguished by 4 hertz and 16 hertz flashing respectively. Conflicting phases or shorted phases

The contractor shall provide the necessary Loop Detector Amplifiers as required on the plan.

16570.4.5.16 – Controller Operation

Consistent with customary trade practices, the manufacturer shall furnish a warranty for all electrical or mechanical equipment described herein. The contractor shall turn such warranty over to the owner for potential dealing with the guarantor.

If the contractor is the guarantor, he specifically waives the requirements of Section 289.14(2), Wisconsin Statutes, and agrees as a condition of the contract that the owner may maintain an action against him at anytime during the warranty period for recovery of damages which the state may have sustained by reason of the failure of the contractor to comply with the provisions of the warranty provided to the owner.

During the installation and testing of the controller, the contractor shall provide, at his own expense, a competent representative to oversee, direct and manage the installation and testing of the controller. In the final stages of the installation and testing, the manufacturer's representative shall be available at the job site for consultation until such time as the controller operation is tested and accepted.

If a malfunction in the controller unit or its auxiliary equipment occurs during the warranty period, the supplier shall, within 24 hours after notification (excluding Saturday and Sunday), furnish a like controller unit, module, or auxiliary equipment, for use while the warranted unit is being repaired. The isolation of any malfunction and the repair and/or replacement of any device within the warranty period shall be the responsibility of the supplier. After the supplier has repaired and returned the equipment, the County shall return the spare component to the supplier.

16570.4.6 – Method of Measurement

Traffic Controller W/Cabinet will be measured as a complete unit of work.

16570.4.7 – Basis of Payment

Traffic Controller W/Cabinet, measured as provided above, will be paid for at the contract unit price each, which price shall be payment in full for furnishing and installing the signal controller and conflict monitor together with cabinet, switches for flashing operation and fittings as are necessary to assure that the controller will perform said functions; and for all labor, tools, equipment and incidentals necessary to complete the work.

16570.5 – OPTICOM PRE-EMPT SYSTEM

16570.5.1 – Description

Work in this division shall consist of furnishing a complete 3-M Priority Control System including detectors, discriminators, and detector cable, and all incidental items to complete the work as shown on the plans.

Any material and labor not specifically covered by the plans and specifications that may be necessary to complete the Electrical Work (not specifically covered by others) shall be furnished without extra cost. The electrical work will not be deemed complete until all work is in proper operating order.

16570.5.2 – Codes and Standards

All work in this division shall conform to the requirements of comparable sections of the Wisconsin Division of Highway Standard Specifications for Road and Bridge Construction, (WSSRBC) including section 640 except as modified within this specification.

All electrical materials and their installation shall conform with the latest requirements of the National Electrical Code (NEC), Wisconsin Electrical Code and accepted standards of good workmanship. All materials for which a standard has been established by the Underwriters Laboratories, Inc. shall have their label firmly attached.

16570.5.3 – Priority Control System

(1) Priority Control Components. The 3-M Priority Control System shall be operated from the traffic controller cabinet supplied. The system shall include discriminators, detectors,

and detector cable and all other components required for a complete installation. All materials shall meet NEMA, NEC, and State requirements.

The discriminators shall be 3-M Opticom model 454 or approved equal. Discriminators shall come equipped to be rack mounted. The discriminator shall be capable of 4-channel detection. One (1) discriminator for each intersection shall be necessary for this bid item.

The detectors shall be 3-M Opticom model 722 or approved equal.

The detector cable shall be 3-M Opticom model 138 or approved equal.

16570.5.4. – **Basis of Payment**

All work for this 3-M Priority Control System including discriminators, detectors and detector cable as described herein, will be paid for at the lump sum price Opticom Preempt System shall be payment in full for furnishing a complete priority control system, except items specifically covered in other unit prices, and incidentals necessary to complete the work in accordance with the contract.

16570.6 – REMOTE COMMUNICATIONS SYSTEM

16570.6.1 – Description

Work in this division shall consist of the installation of a phone line conduit from the controller cabinet to existing SBC (Ameritech) facilities, and the installation of a modem within the cabinet for the purpose of remote communication with the controller. The contractor shall coordinate the installation and connection of a phone line in the conduit with SBC (Ameritech). The Contractor shall coordinate with the signal controller vendor for the furnishing of an acceptable modem to be installed within the controller cabinet.

The installation of an additional outlet and surge protector for the modem shall also be included in this work.

Any material and labor not specifically covered by the plans and specifications that may be necessary to complete the Electrical Work (not specifically covered by others) shall be furnished without extra cost. The electrical work will not be deemed complete until all work is in proper operating order.

16570.6.2 – Materials

The modem to be installed shall be a Hayes compatible 1200 to 57600 baud modem (verify with controller vendor).

An appropriate RS-232 serial cable shall be provided to connect the modem to the signal controller.

The Contractor shall submit a list to the City of all proposed equipment to be installed as part of the remote communications system.

16570.6.3 – Basis of Payment

All work for the completed remote communications system, including the installation and connection of a phone line to the cabinet and furnishing of the modem, and for all labor, tools, equipment and incidentals necessary to complete the work, shall be paid for at the lump sum price bid for "Remote Communications System."

16570.7 – LED TRAFFIC SIGNAL FACES

16570.7.1 – Description

Work in this section shall consist of the furnishing and installing of Light Emitting Diode (LED) traffic signal heads in accordance with the Plans and Details.

Any material and labor not specifically covered by the plans and specifications that may be necessary to complete the Electrical Work (not specifically covered by others) shall be furnished without extra cost. The electrical work will not be deemed complete until all work is in proper operating order.

16570.7.2 – Materials

The LED traffic signal modules shall be manufactured by General Electric, Leotek Corporation, Precision Solar Controls, or equal, as approved by the City of Altoona.

16570.7.2.1 – Traffic Signal Heads

Traffic signal heads shall include a Light Emitting Diodes (LED) signal meeting ITE lighting output standards. The housing unit shall be made of a yellow polymer material, and shall be compatible with the specified LED modules.

16570.7.2.2 – Pedestrian Signal Heads

The pedestrian signal heads shall include a single face (overlay) with 12-inch LED walk / don’t walk international symbols meeting ITE lighting output standards. The housing unit shall be made of a yellow polymer material, and shall be compatible with the specified LED modules.

16570.7.3 – Basis of Payment

Traffic signal faces, including backplates and LED modules, shall be paid for at the contract unit price each, which shall include furnishing, assembling, and installing the complete traffic signal face in place and for all labor, tools, equipment and incidentals necessary to complete the work.